Industry 4.0 Connection

2017 · CIRCULAR

APEX CONNECTORS




Patent of invention, reliable quality

PLT trademark, best merchandise.

100% Made In Taiwan

PLT®

Apex connector

鍩鋼精密科技

APEX PRECISION TECHNOLOGY

Since 1978

APEX Enterprise and Nature Coexistence

Coexistence of human and nature is the highest enterprise principle to APEX.
All APEX's staff and operation must be based on the premise of preserving natural environment and protecting the earth.

- Manufacturing the low-pollution products
- Manufacturing without polluting the environment
- Recycle and reuse
- Contribution to protecting the earth
- Development of environmental protection

1.The product information in this catalog is for reference only.
Please request the engineering drawing for the most current and accurate design information.
2.In order to make improvements in the products,we reserve the right to make changes, updates and corrections to the information provided in this catalog at any time.
Subject to change without notice. Thank you for your understanding.

APEX 企業與自然共存

APEX 應該視(人類和地球自然環境共存)為企業最高指導的原則，
所有的APEX職員和企業的全部運作，都要以維護自然環境、保護地球為前提。

- 製造低污染的產品
- 製造處理不汙染環境
- 所有的廢棄物回收再利用
- 為保護地球環境，貢獻一份心力
- 持續環境保護發展的工作

1.本目錄記載數據僅供參考，詳細內容請參考式樣書或圖面。
2.本目錄記載內容為了改進產品如有變更，恕不另行通知敬請見諒。

APEX企業は自然と共存します

APEXはずっと＜人類と地球の共存する環境＞を企業最高指導の原則とし、
全てのAPEX社員及び企業の活動は全て地球環境の保護、維持を前提としております。

- 汙染の少ない製品作り
- 製造プロセスでは環境汙染を下げる
- すべての廃棄物は回収まだは再利用する
- 地球環境保護のため、気力を持って貢獻する
- 環盡保護発展の仕事を持続する

1.本カタログ記載の数値につきましては、参考数値です。詳しい内容につきましては、仕様書、図面を参考して下さい。
2.本カタログ記載内容は、製品向上のため予告なく変更する事がありますのでご了承下さい。

Patent of invention, all rights reserved 專利產品 仿冒必究

Contents

CONTENTS

Assembling Method(PLS-28) / 組合方法 1-1

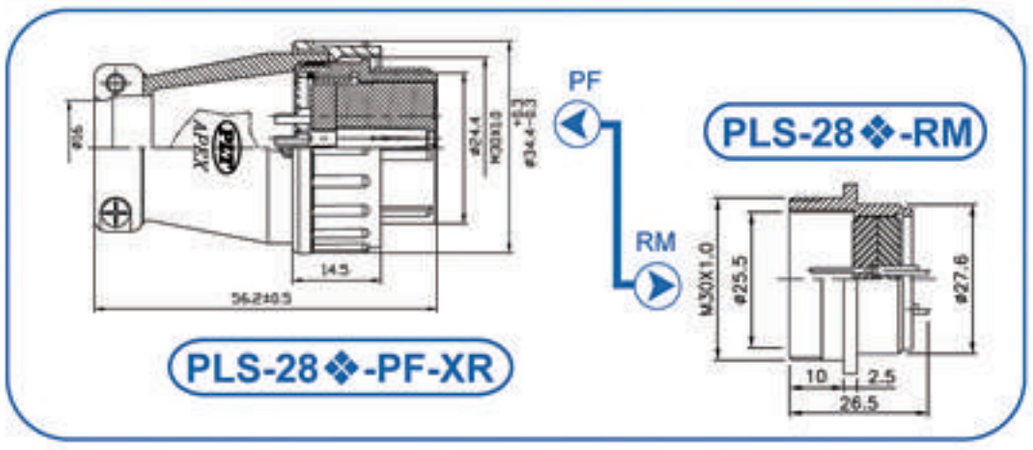

PLT Series Circular Connectors / 圓型連接器 2-1

● 以上機種可設計防水型 Above models could be altered to waterproof types IP65 IP67 IP68

專利產品，仿冒必究
Patent of invention, all rights reserved

PLT® SINCE 1978

Made In Taiwan

Contents

CONTENTS

PLT SINCE 1978

● 備註：另有鎖側螺絲選項 Optional accessory : side screws

● 以上機種可設計防水型 Above models could be altered to waterproof types IP65 IP67 IP68

專利產品，仿冒必究
Patent of invention, all rights reserved

Contents

CONTENTS

● 備註：另有鎖側螺絲選項 Optional accessory : side screws

● 以上機種可設計防水型 Above models could be altered to waterproof types IP65 IP67 IP68

專利產品，仿冒必究
Patent of invention, all rights reserved

PLT SINCE 1978

Made In Taiwan

Contents

CONTENTS

Complex Series / 綜合型號 5-1

專利產品，仿冒必究
Patent of invention, all rights reserved

組裝步驟說明 Assembly Instructions 適用機種：PLT-25系列、PLT-30系列

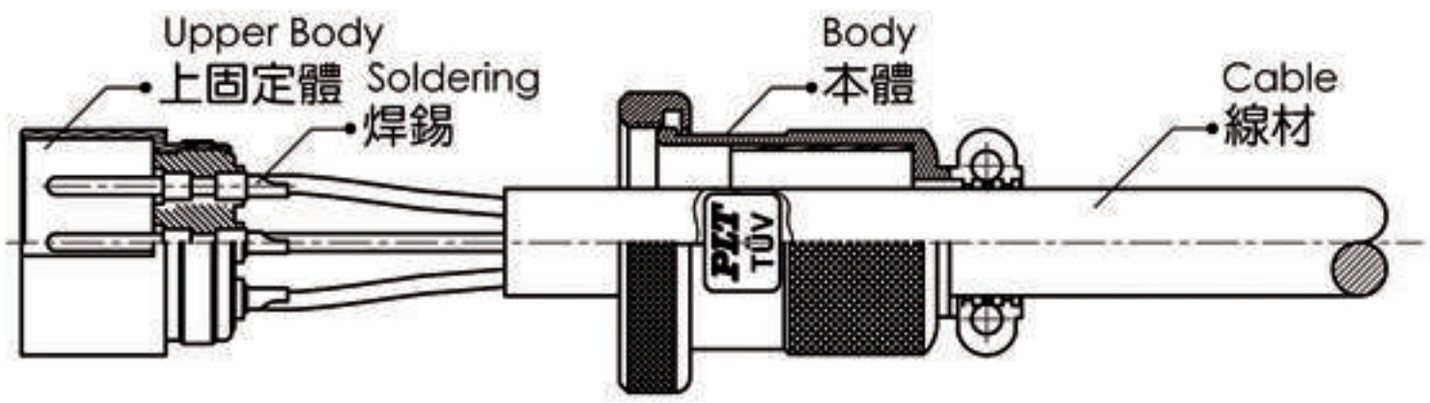

1

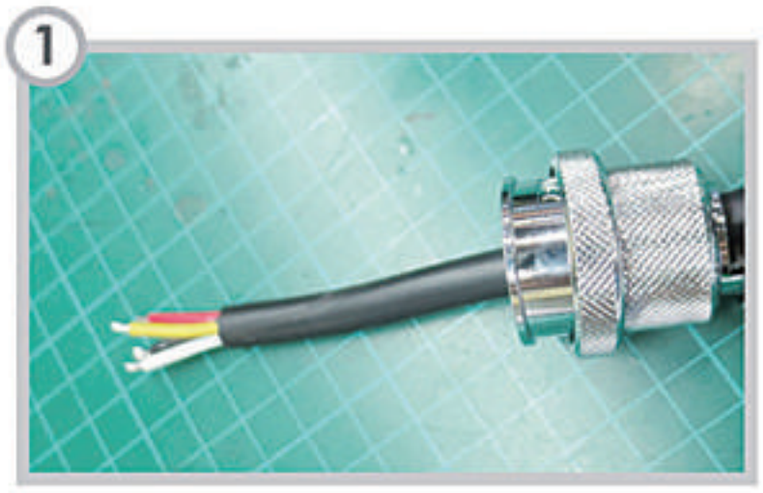

線材穿過本體
Cable goes through the body

2

使用夾具將接頭夾持住，線材裸線與上固定體的接觸體缺口進行焊線加工
Using the clamp to fix the connector Doing soldering assembly between the bar wire and upper body

3

本體與上固定體對鎖，將螺紋順時針方向鎖緊（需轉動本體鎖入，非轉動接頭）
The body and the upper one are locked together. Screw clockwise and be sure to only rotate the body itself instead of the whole connector

4

半月邊壓入（與線材不能留有間隙）
Crescent-shaped clamp mounted
(The gap couldn't be allowed with the cable connected)

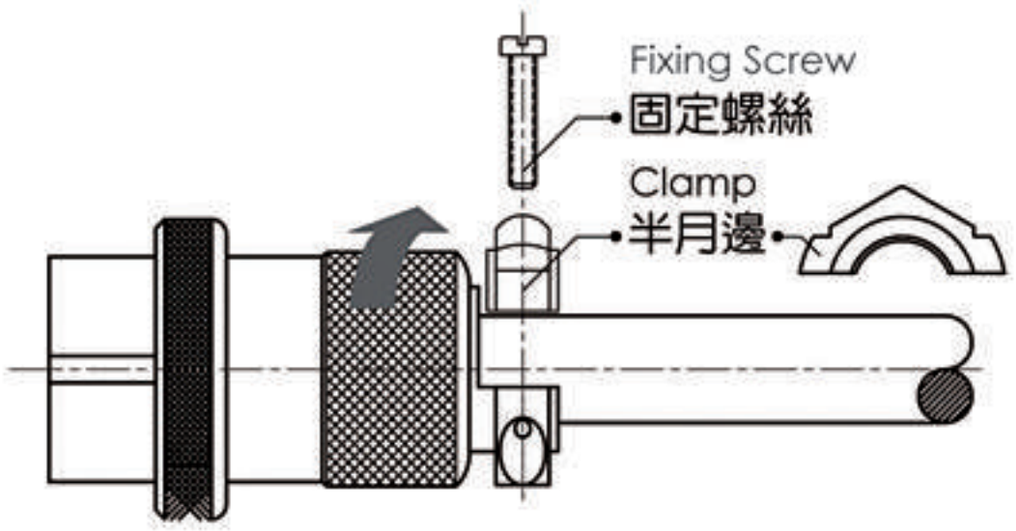

5

固定螺絲(圓頭十字 x 2支)鎖緊
With 2 screws (Round head) screwed tight

6

完成 Finish

⚠ 特別注意：拔出步驟說明 Pull-out instruction

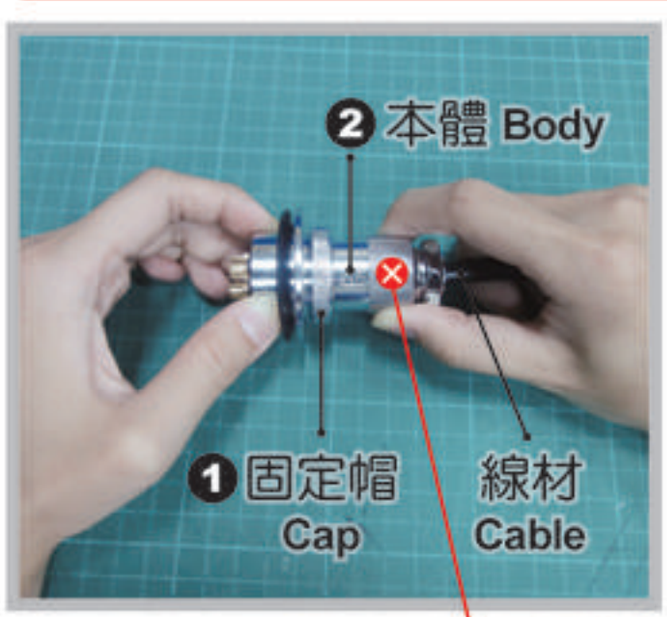

插頭與插座要分開時，請將❶固定帽依❸之方向旋開，再將插頭與插座分離。

When pulling out the plug, please follow ❸ screw off direction to pull out the plug and socket.

（請勿直接旋開本體，避免 線材 因 扭轉 導致斷裂）
Don't screw off the body itself in case the cable would be broken while twisting

1 Instruction

ASSEMBLING METHOD

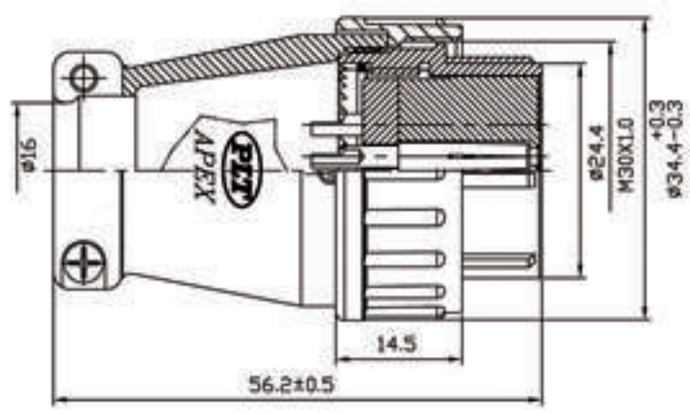

PLS-28❖-PF X-R

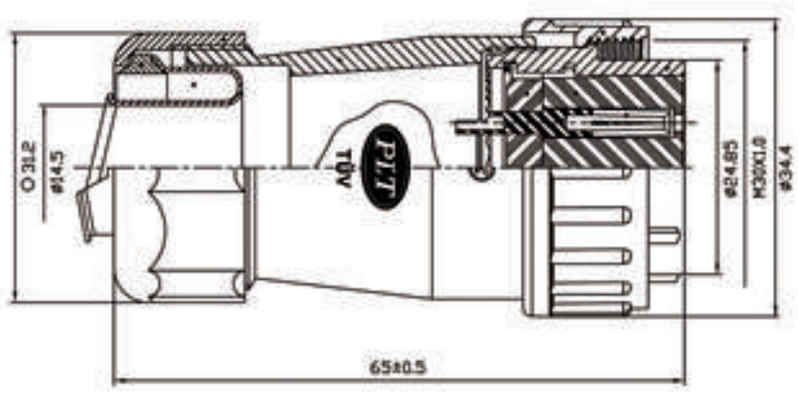

PLS-28❖-GPF X-R

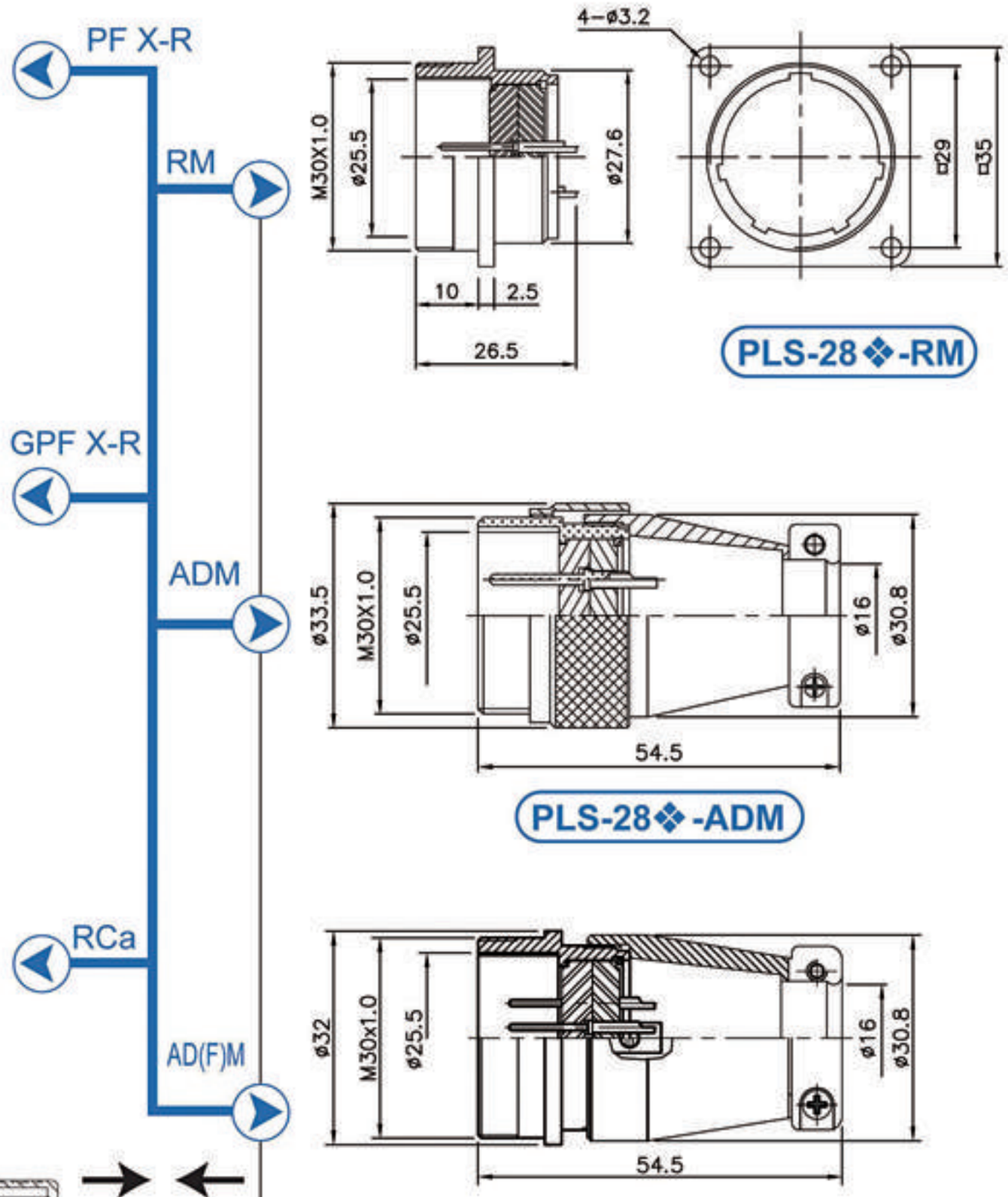

PLS-28❖-RM

PLS-28❖-ADM

Please select the required contact no. from the below column

請從下列的欄位中選擇一個適當的接點

Nomenclature 表示方法

PLS-28❖-GPF

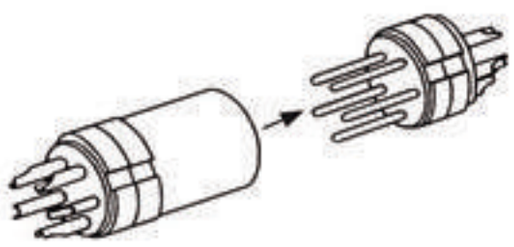

The insertion between male and female contacts.

母導梢與公導針對接

- In addition, when the direction of arrows are identical, the assembly may not be proceeded

此外，當箭頭的方向相同時，則無法組合

(TÜVApproved) ← → : (UL Approved)

❖ No. of contacts 接點數目	12	16	17	20	26		
Contacts Configuration 接點方位	TÜV	TÜV	TÜV	TÜV	TÜV		
Rated current / voltage 額定電流 / 電壓	10A 250V	5A 250V	5A 250V	5A 250V	5A 250V		
Operating voltage limit (AC.V.rms) 操作電壓限制	250	250	250	250	250		
Withstanding voltage (AC.V.rms) 1 minute 耐電壓1分鐘	1000	1000	1000	1000	1000		
Insulation resistance (MΩ MIN.) at DC 500V 絕緣阻抗	1000	1000	1000	1000	1000		
Contact resistance (mΩ MAX.) at DC 1A 接觸阻抗	5	5	5	3	3		
Solder inter diameter 焊孔內徑	1.6	1.6	1.6	1.2	1.2		

PLT SINCE 1978

● 以上機種可設計防水型 Above models could be altered to waterproof types IP65 IP67 IP68


PLT-8 Series


PLT-9 Series


PLT- 10 Series


PLT-11 Series


PLT-14 Series


PLT-15 Series


PLT- 15.5 Series

PLT-16 Series

PLT-16A Series

PLT-17 Series


PLT-18 Series


PLT-19 Series


PLT-25 Series

PLT-25A Series


PLT-30 Series

PLT-303 Series


PLT-31 Series


PLT-32 Series


PLT-40 Series


PLT-50 Series


WGP

防水電氣配管
Liquid-Tight Conduits


GP

防水防爆電氣配管
Explosionproof Liquid-Tight Conduits


CG

耐扭式電纜固定頭
Flex Protective Cable Glands

ORDERING INFORMATION

PLT-162-P-R

- RoHS COMPLIANT 歐盟環保指令
- CONNECTOR TYPE 連接器類型
- NO. OF CONTACTS(2-37) 導梢數量
- SHELL SIZE(8,9,11,15,16,17,18,19,25,30,32,40,50) 外殼尺寸
- NAME OF SERIES 系列名稱

P	Plug	插 頭	AD	Adapter	中 繼
R	Receptacle	插 座	Ca	Cap	保護蓋
F	Female	導 梢	RT	Rubber tube	橡膠管
M	Male	導 針	GP	Conduit type	軟管式
WGP	Nylon type	尼龍管式	CG	Cable glands	迫緊頭
LP	Shape	L型90°	RL	Single thread	單 牙

MATERAL & FINISH

Kindly instruct material & finish by below types when ordering

Description	Material	Finish
Shell/外殼、本體	• Stainless Steel/不鏽鋼 • Zinc Die-Casting/鋅合金壓鑄 • Aluminum alloy/鋁合金壓鑄	• Chrome-plated/鍍鉻 • Gold-plated/鍍金 • Nickel-plated/鍍鎳 • Siliver-plated/鍍銀
Insulator/絕緣體	• Bakelite/電木 • Delrin/塑鋼 • Teflon/鐵氟龍	
Contact/接觸體	• Brass/銅 • Phosphor bronze/磷青銅 • Berylium copper/鈹銅	• Gold-plated/鍍金 • Nickel-plated/鍍鎳 • Siliver-plated/鍍銀

SHELL SIZE

8

TÜV

Input Type / Output Type

PLT- 8 Series

RF

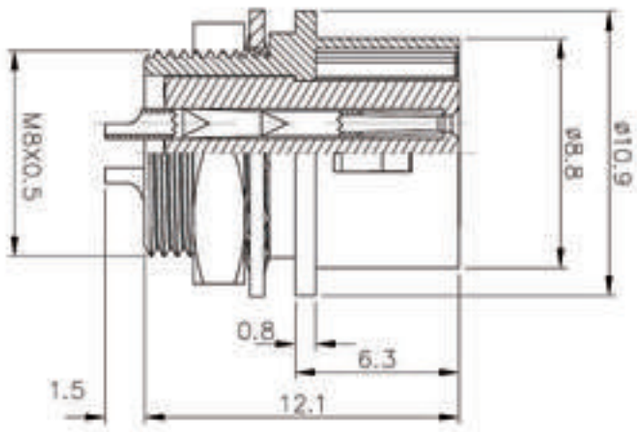

PLT-8❖-RF-R

PM

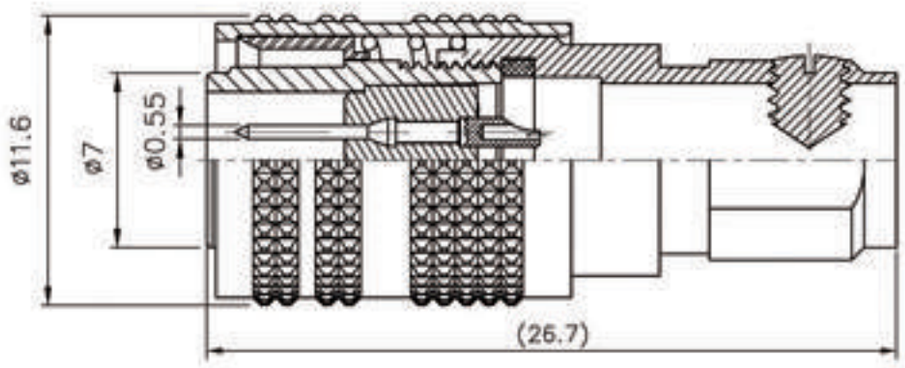

PLT-8❖-PM-R

PF

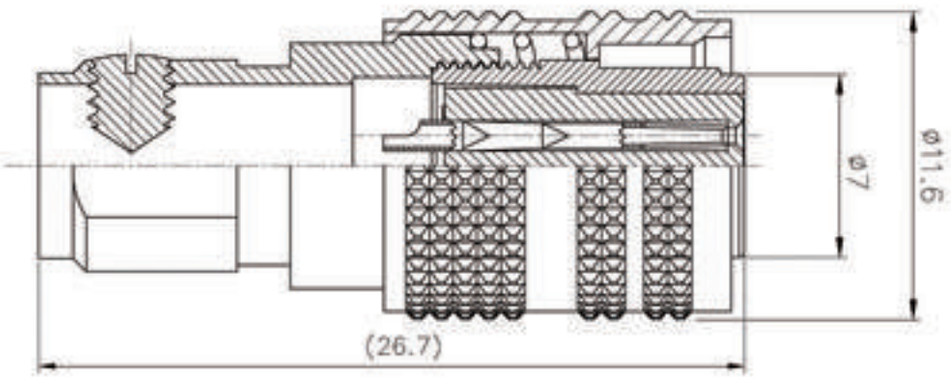

PLT-8❖-PF-R

RM

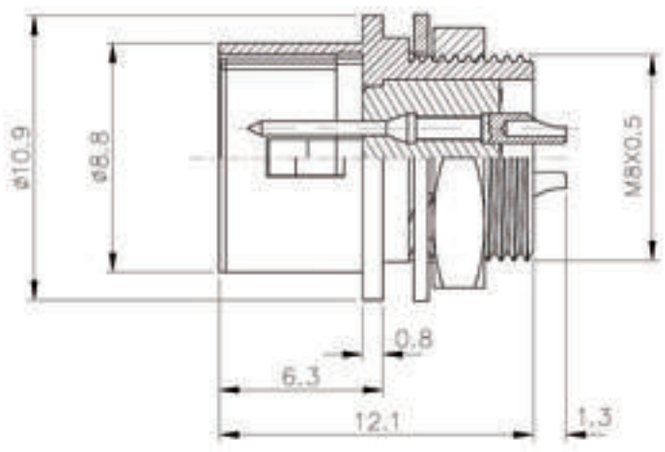

PLT-8❖-RM-R

ACCESSORIES:

Cable Clamp

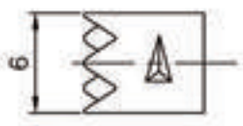

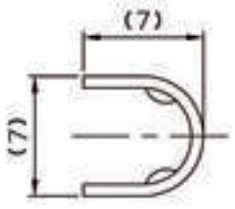

W-017BH

Rubber Pipe

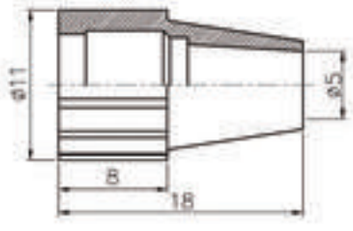

❖ No. of contacts	4	5	6				
Contacts Configuration							
Rated current / voltage	1A 300V	1A 300V	1A 300V				
Operating voltage limit (AC.V.rms)	125	125	125				
Withstanding voltage (AC.V.rms) 1 minute	300	300	300				
Insulation resistance (MΩ MIN.) at DC 500V	1000	1000	1000				
Contact resistance (mΩ MAX.) at DC 1A	10	10	10				

● 以上機種可設計防水型 Above models could be altered to waterproof types IP65 IP67 IP68

Output Type

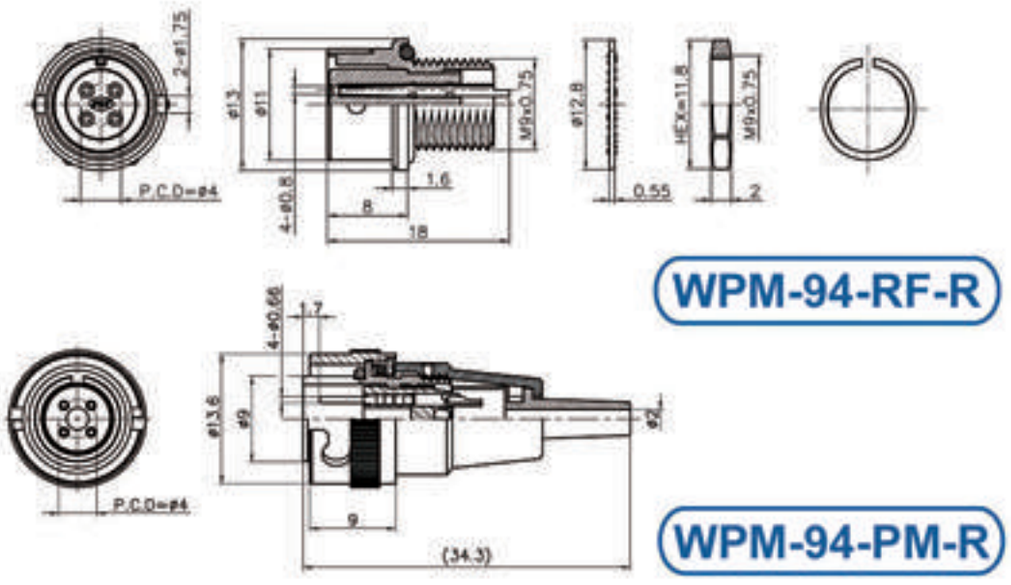

WPM-94 Series

❖ No. of contacts	4					
Contacts Configuration						
Rated Current / Voltage	1A 300V					
Operating Voltage Limit (AC.V.rms)	AC 100V DC 140V					
Withstanding Voltage(AC. V. rms) 1 minute	300					
Insulation Resistance (MΩ min.) at DC 1A	200					
Contact Resistance (MΩ MAX.) at DC 1A	10					

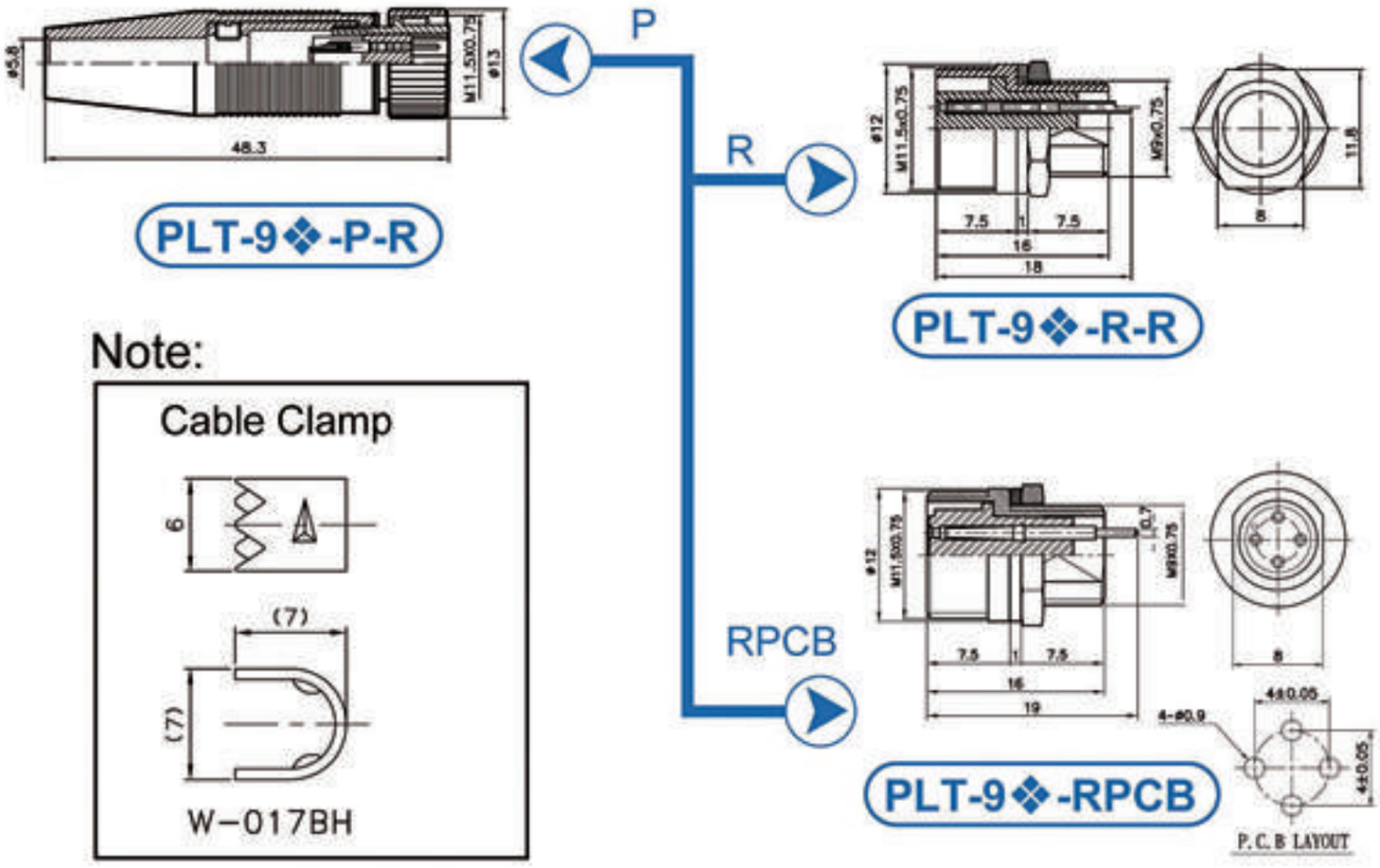

PLT- 9 Series

❖ No. of contacts	4	6	7			
Contacts Configuration						
Rated Current / Voltage	1A 300V	1A 300V	1A 300V			
Operating Voltage Limit (AC.V.rms)	300 AC300V	300 AC300V	300 AC300V			
Withstanding Voltage(AC. V. rms) 1 minute	200	200	200			
Insulation Resistance (MΩ MAX.) at DC 500V	10	10	10			
Contact Resistance (MΩ MAX.) at DC 1A	0.7	0.7	0.7			

PLT SINCE 1978

● 以上機種可設計防水型 Above models could be altered to waterproof types IP65 IP67 IP68

Input Type / Output Type

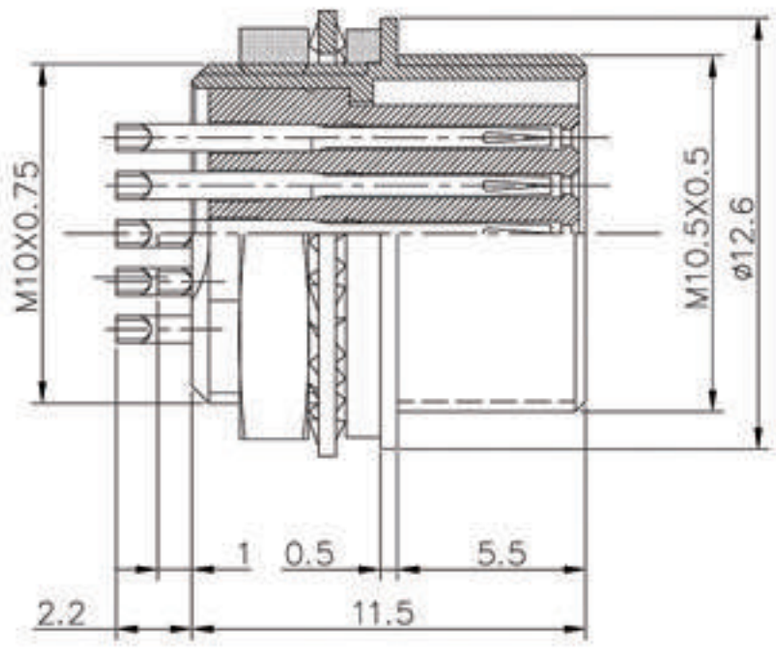

PLT-10❖-RF-R

PLT- 10 Series

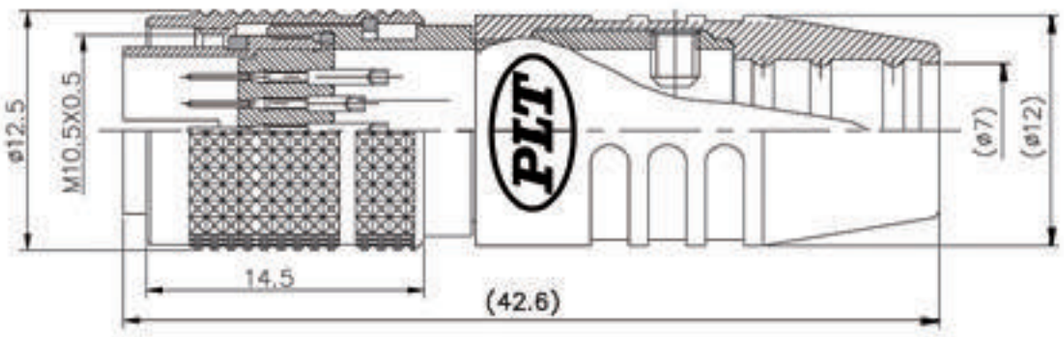

PLT-10❖-PM-R

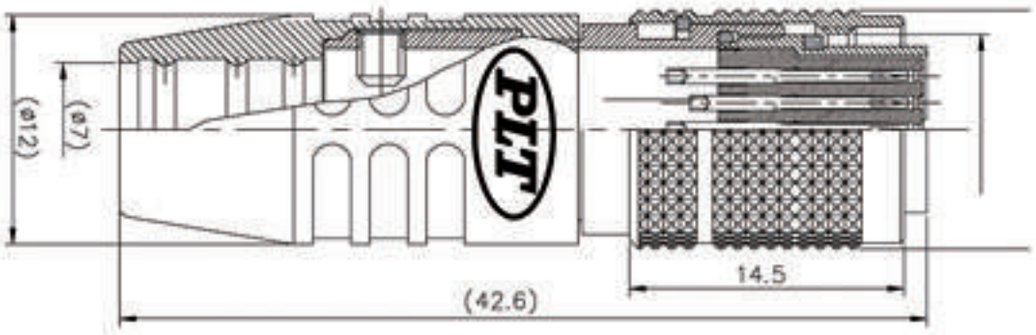

PLT-10❖-PF-R

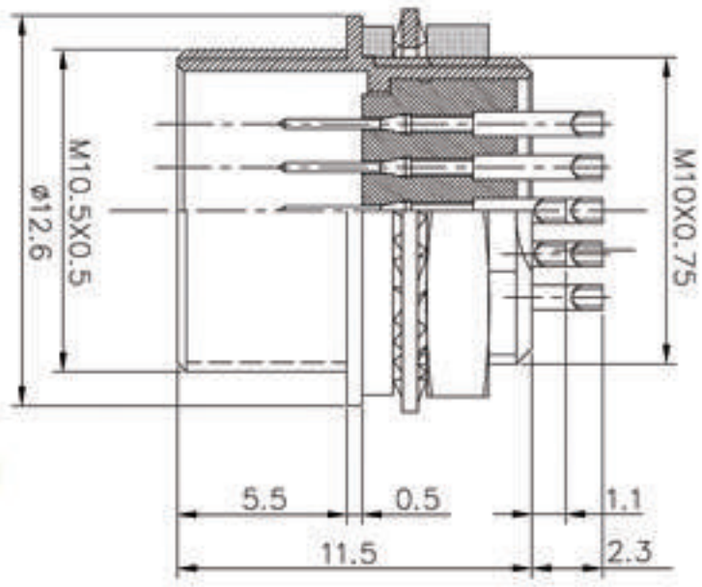

PLT-10❖-RM-R

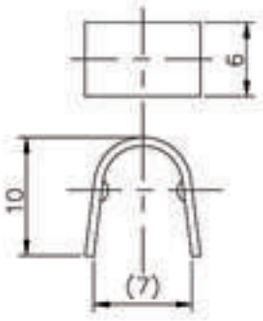

❖ No. of contacts	16					
Contacts Configuration						
Rated current / voltage	1A 30V					
Operating voltage limit (AC.V.rms)	42V					
Withstanding voltage (AC.V.rms) 1 minute	100					
Insulation resistance (MΩ MIN.) at DC 500V	1000					
Contact resistance (mΩ MAX.) at DC 1A	30					

● 以上機種可設計防水型 Above models could be altered to waterproof types IP65 IP67 IP68

Input Type / Output Type

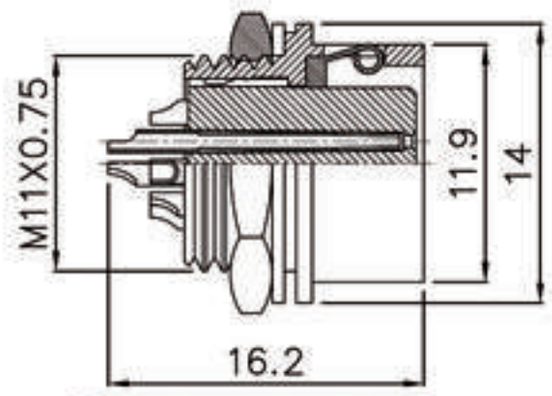

PLT-11❖-RF-R

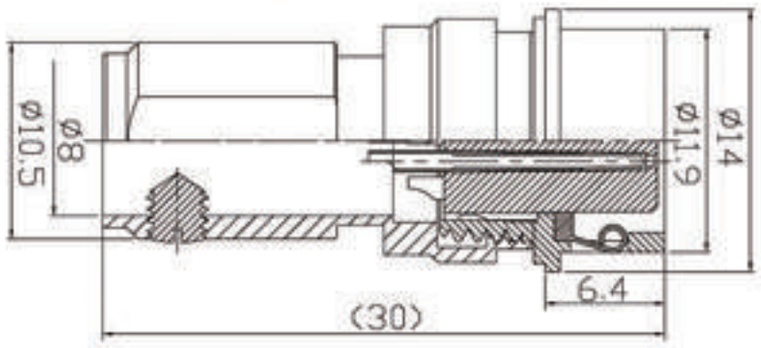

PLT-11❖-ADF-R

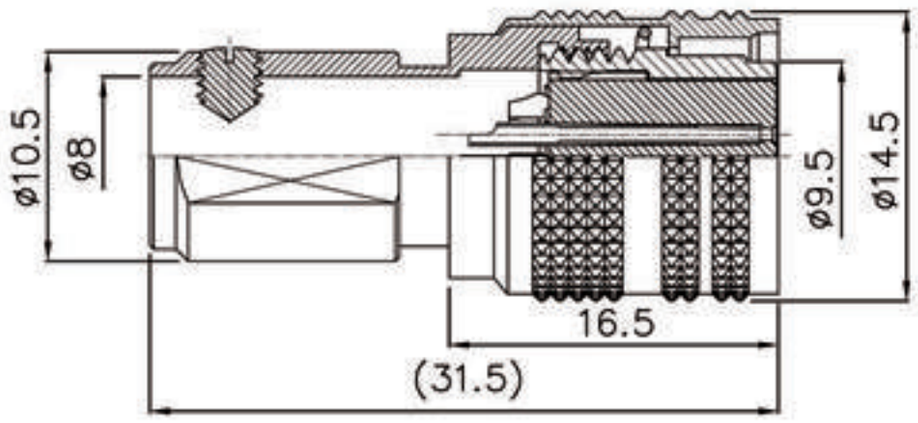

PLT-11❖-PF-R

PLT- 11 Series

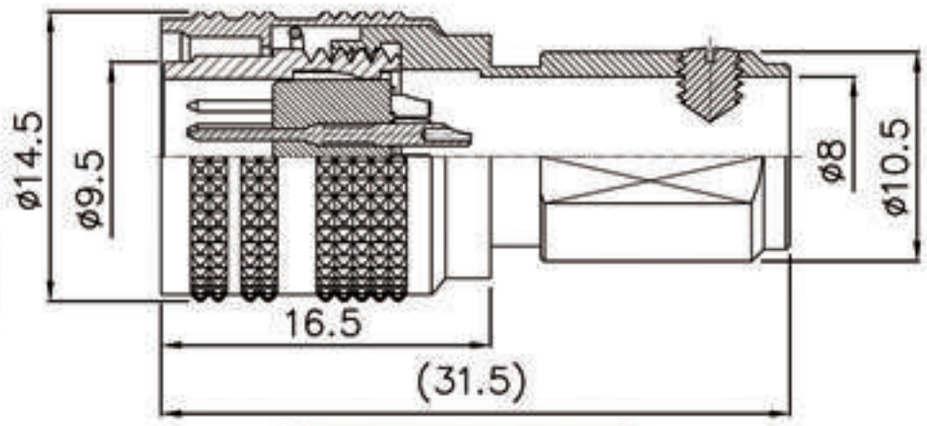

PLT-11❖-PM-R

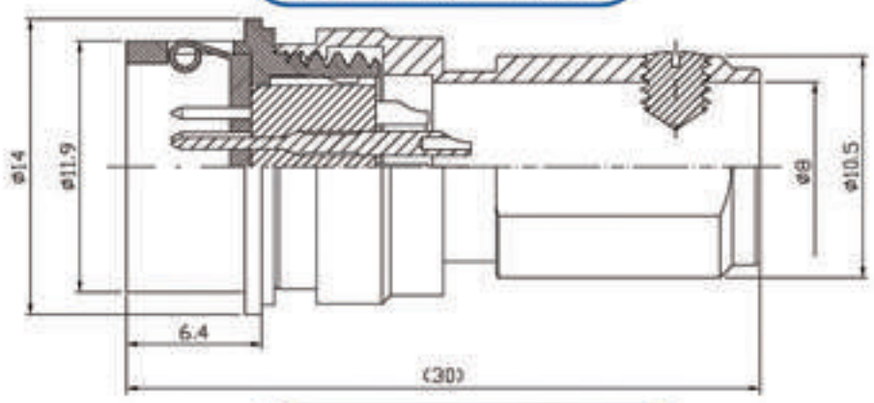

PLT-11❖-ADM-R

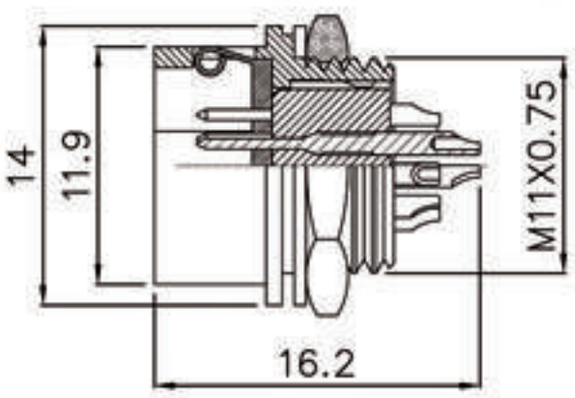

PLT-11❖-RM-R

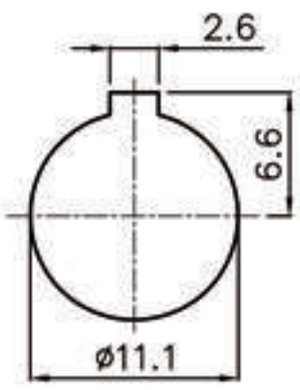

MOUNT HOLE

ACCESSORIES:

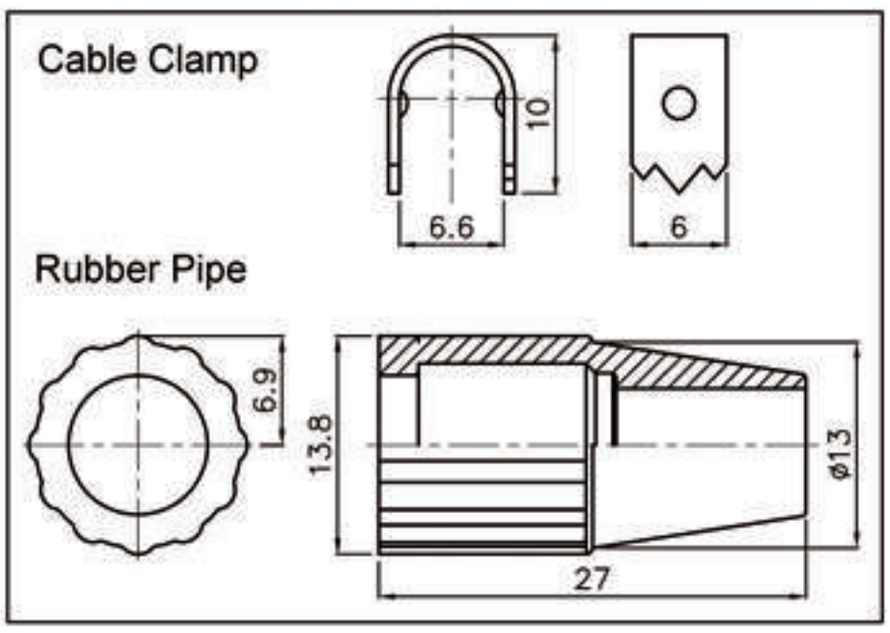

❖ No. of contacts	10	12	16			
Contacts Configuration						
Rated current / voltage	2A 125V	2A 125V	1A 30V			
Operating voltage limit (AC.V.rms)	125	125	42V			
Withstanding voltage (AC.V.rms) 1 minute	125	125	100			
Insulation resistance (MΩ MIN.) at DC 500V	200	200	1000			
Contact resistance (mΩ MAX.) at DC 1A	30	30	30			

PLT SINCE 1978

● 以上機種可設計防水型 Above models could be altered to waterproof types IP65 IP67 IP68

SHELL SIZE

14

TÜV

Output Type

PLT- 14 Series

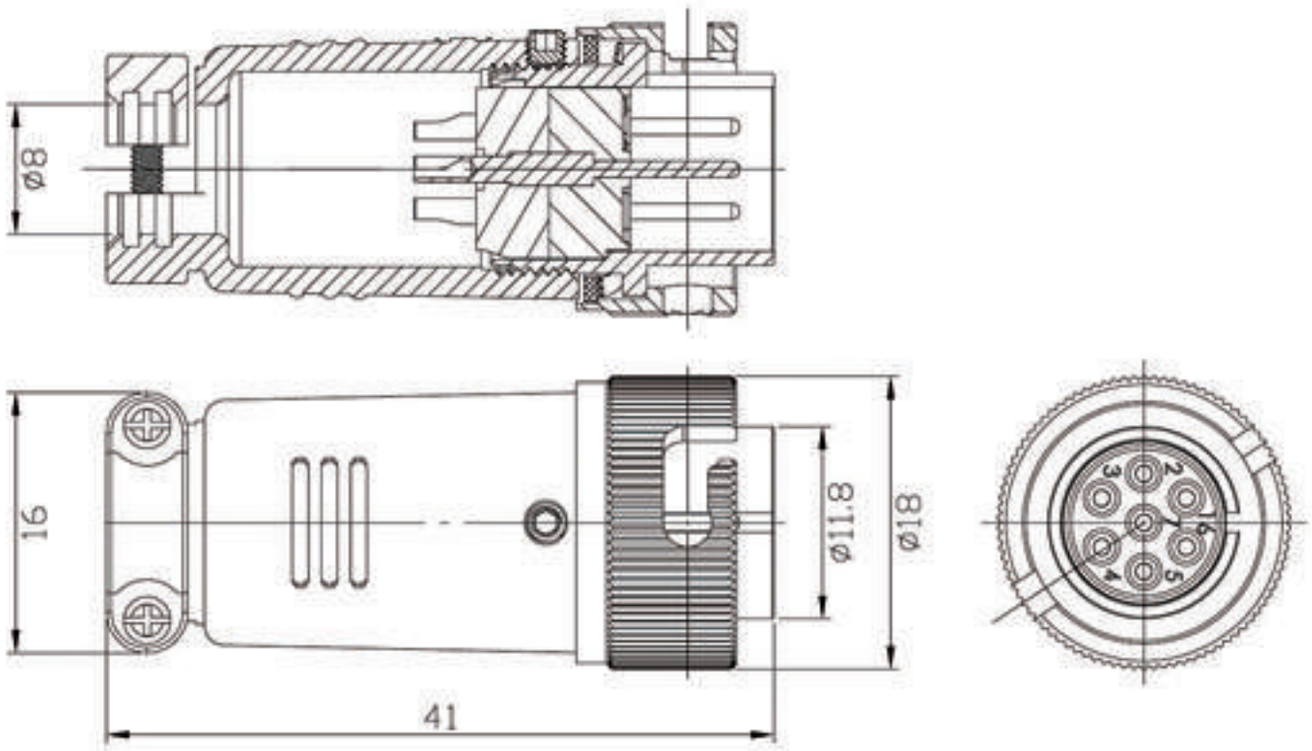

PLT-14 ❖ -PM-R

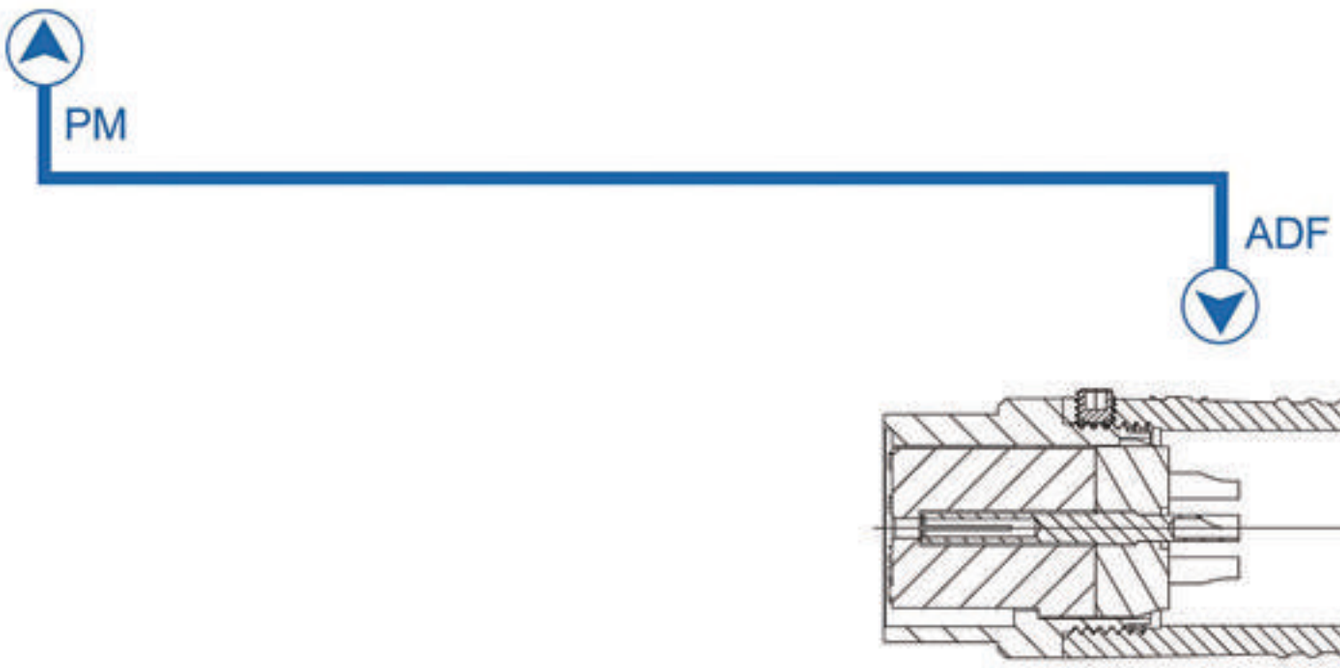

PLT-14 ❖ -ADF-R

No. of contacts	3	4	7			
Contacts Configuration						
Rated current / voltage	5A 125V	5A 125V	5A 125V			
Operating voltage limit (AC.V.rms)	300	300	300			
Withstanding voltage (AC.V.rms) 1 minute	1000	1000	1000			
Insulation resistance (MΩ MIN.) at DC 500V	1000	1000	1000			
Contact resistance (mΩ MAX.) at DC 1A	4	4	4			

● 以上機種可設計防水型 Above models could be altered to waterproof types IP65 IP67 IP68

SHELL SIZE 15

Input Type

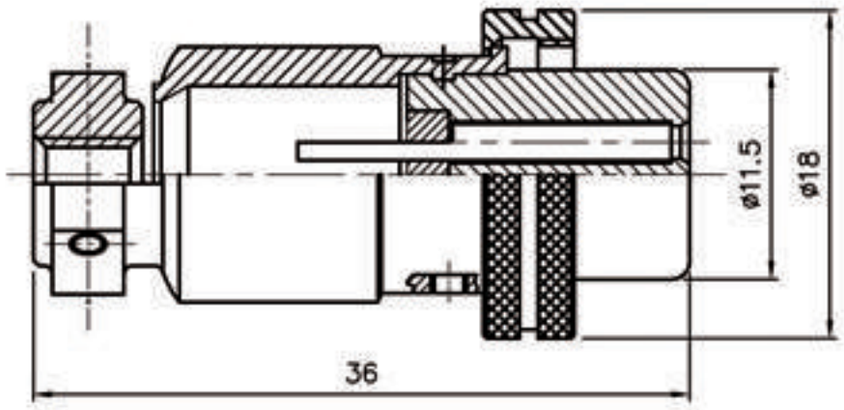

PLT-15❖-P-R

PLT- 15 Series

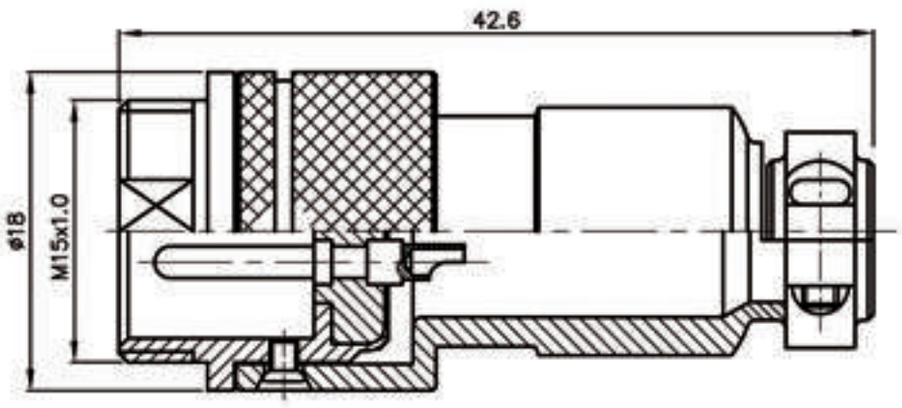

AD

PLT-15❖-AD-R

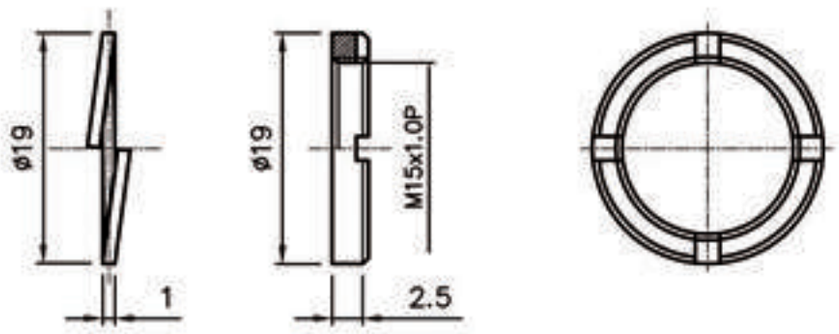

ACCESSORIES

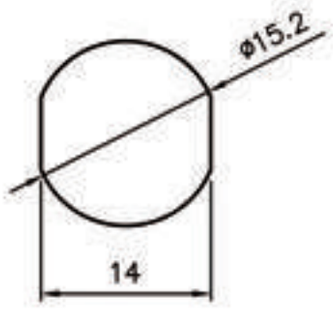

MOUNTING HOLES

R

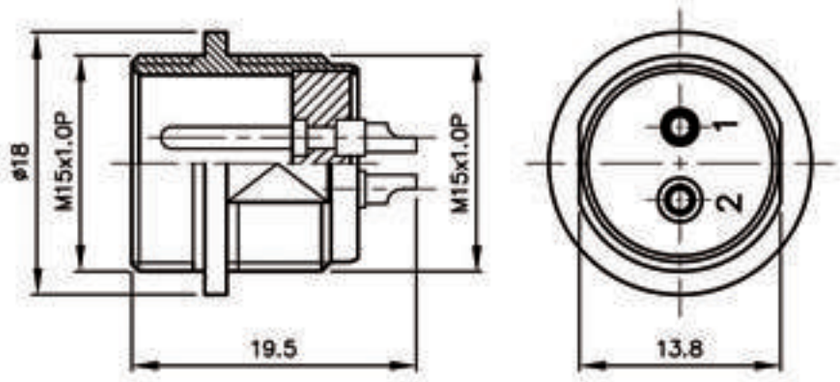

PLT-15❖-R-R

❖ No. of contacts	2	3	4			
Contacts Configuration	 TÜV	 TÜV	 TÜV			
Rated current / voltage	5A 125V	5A 125V	5A 125V			
Operating voltage limit (AC.V.rms)	200	200	200			
Withstanding voltage (AC.V.rms) 1 minute	1000	1000	1000			
Insulation resistance (MΩ MIN.) at DC 500V	100	100	100			
Contact resistance (mΩ MAX.) at DC 1A	10	10	10			
Solder inter diameter	1.8 / 2.3	1.8 / 2.3	1.5			

PLT SINCE 1978

● 以上機種可設計防水型 Above models could be altered to waterproof types IP65 IP67 IP68

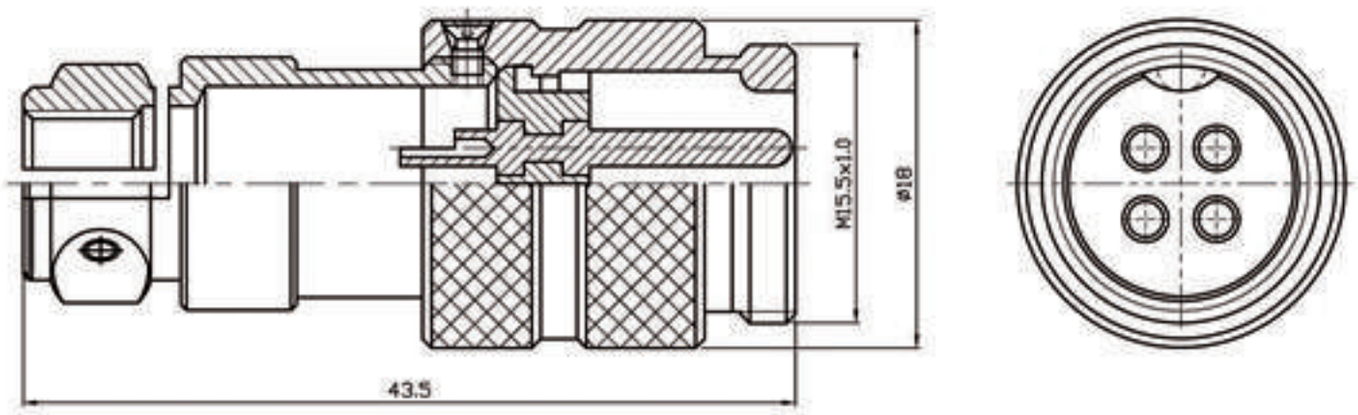

PLT- 15.5 Series

PLT-15.5-4AD-R

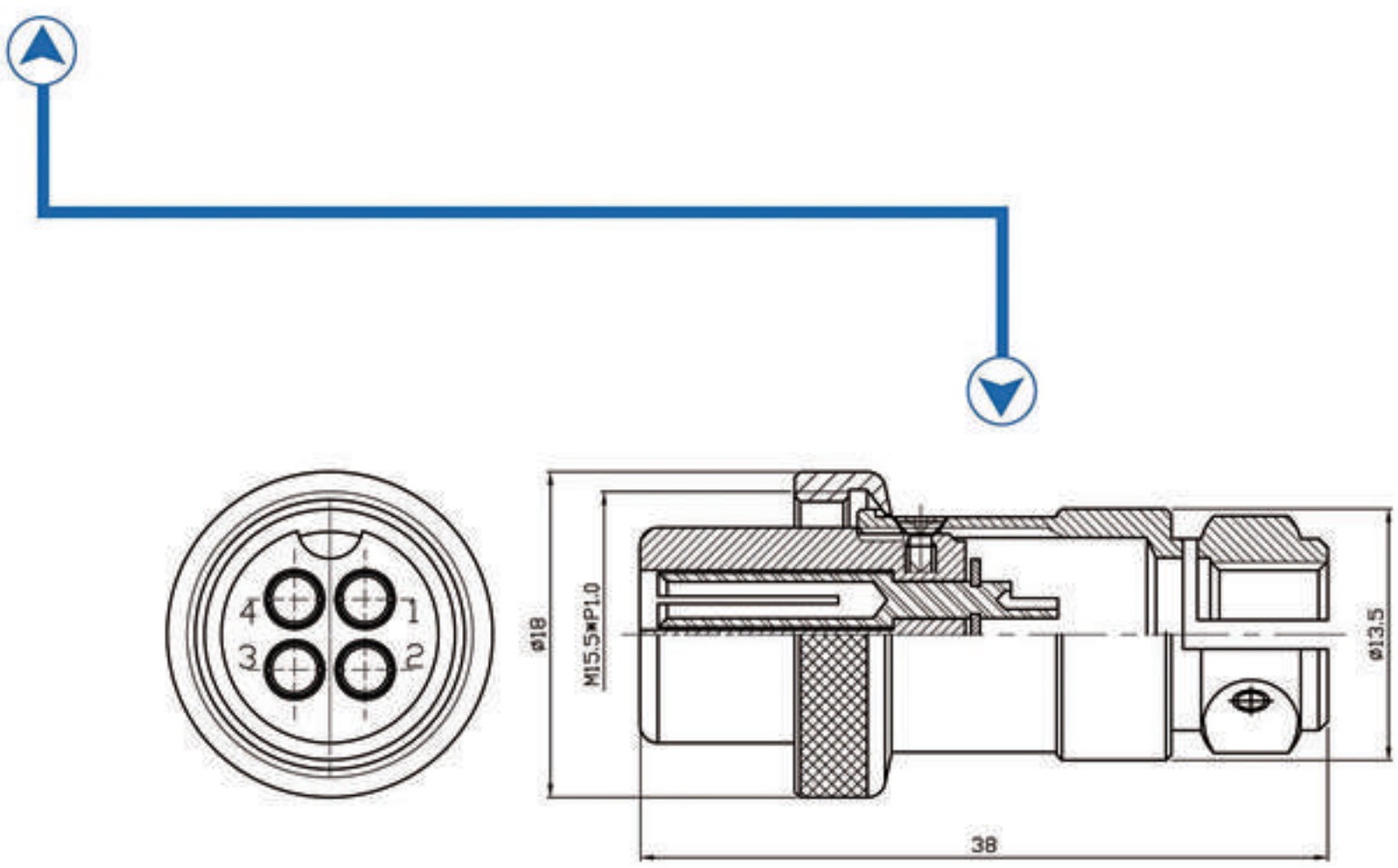

PLT-15.5-4P-R

❖ No. of contacts	4					
Contacts Configuration						
Rated current / voltage	5A 150V					
Operating voltage limit (AC.V.rms)	200					
Withstanding voltage (AC.V.rms) 1 minute	1000					
Insulation resistance (MΩ MIN.) at DC 500V	1000					
Contact resistance (mΩ MAX.) at DC 1A	3					
Solder inter diameter	1					

● 以上機種可設計防水型 Above models could be altered to waterproof types IP65 IP67 IP68

Input Type

TÜV

Stainless Steel不鏽鋼材質

PLT- 16 Series

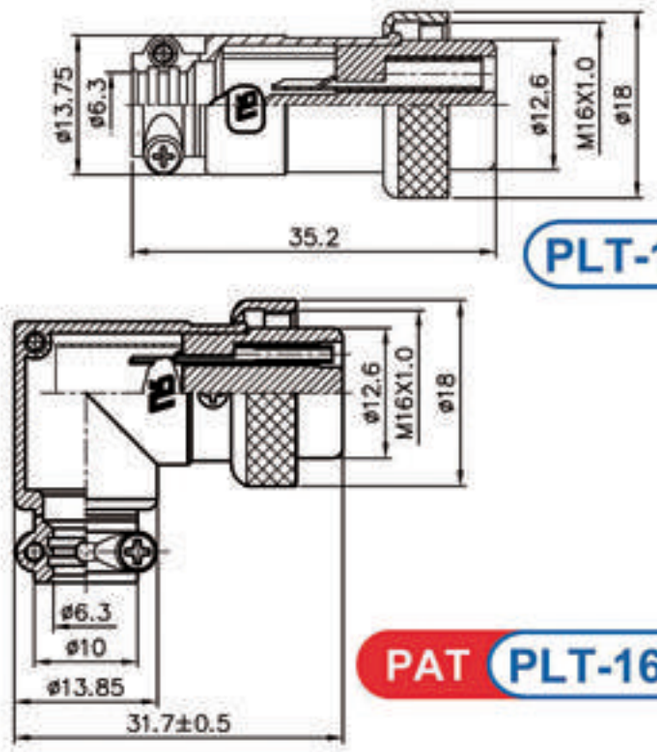

P

PLT-16❖-P-R

LP

PAT PLT-16❖-LP-R

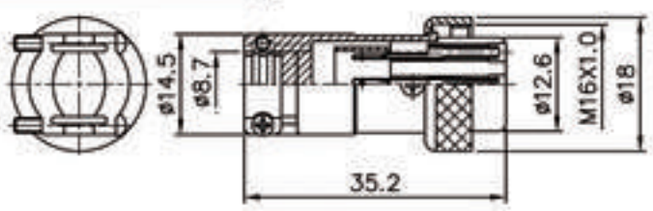

PA

PLT-16 -PA-R

Material: Zinc Alloy
材質: 鋅合金

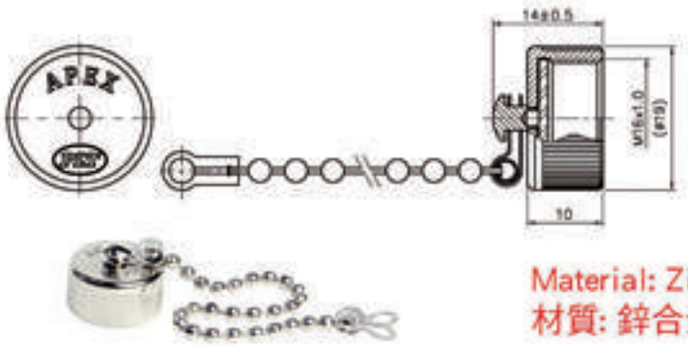

RCaC-R

Material: Zinc Alloy
材質: 鋅合金

PLT-16 -RCaC-R

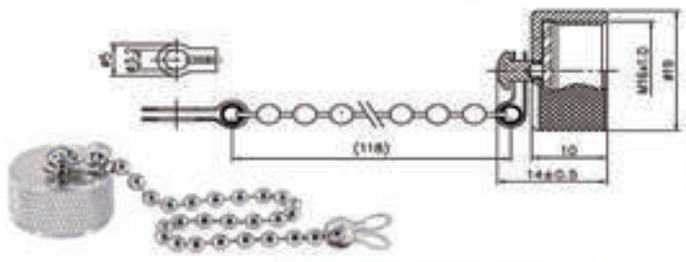

RCa-R

Material: Brass
材質: 銅

PLT-16 -RCa-R

U-C5

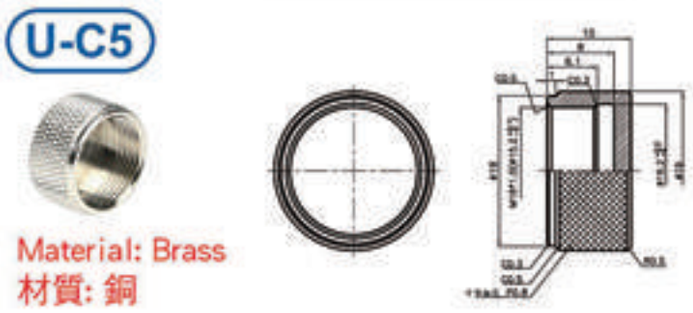

U-C5

Material: Brass
材質: 銅

R

PIN	2	3	4	5	6	7	8
L	20.5	20.5	20.5	20.5	19	19	19

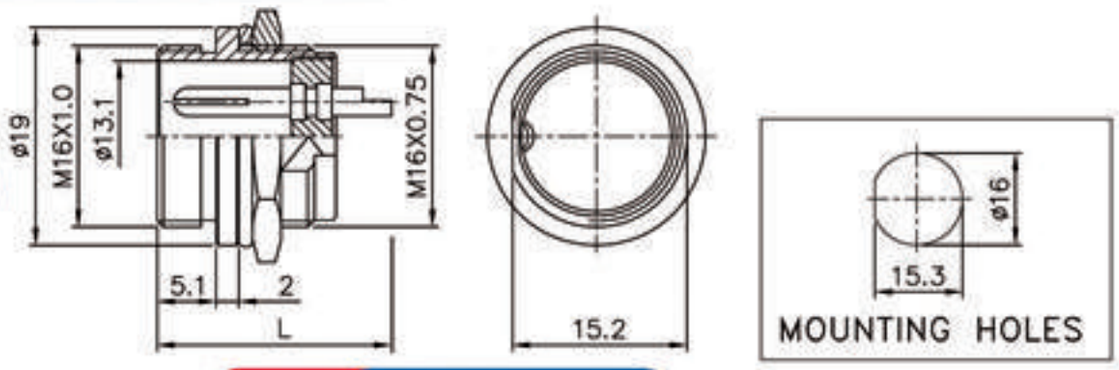

PAT PLT-16❖-R-R

RL

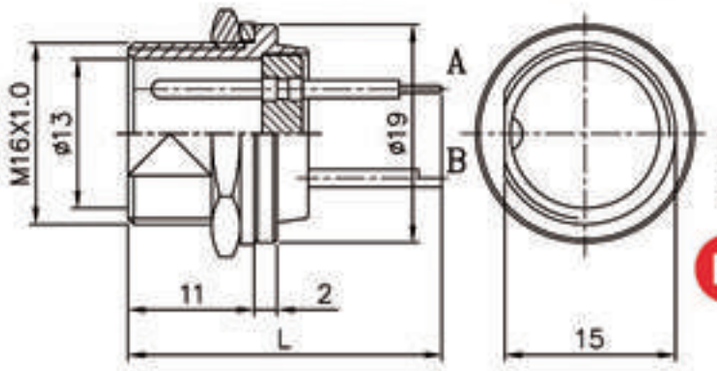

*A: PCB TYPE
*B: SOLDING TYPE

PAT PLT-16 ❖-RL-R

FORM 1 FOR PLT-16*-RL

LENGTH	L1	L2	L3	L4	L5	L6
SIZE	20.5	23.5	29	30.5	21.5	21.5

*FORM 2 (ACCESSORIES)

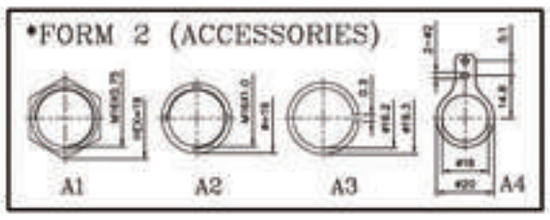

AD

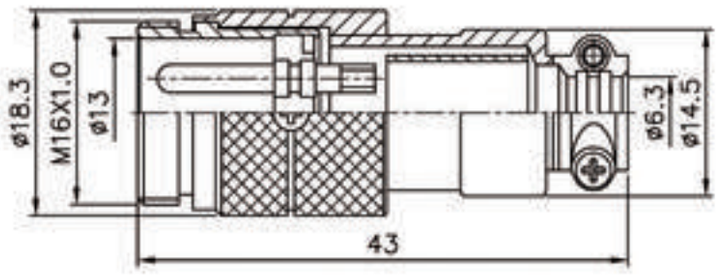

PLT-16❖-AD-R

PD:98441

ADA

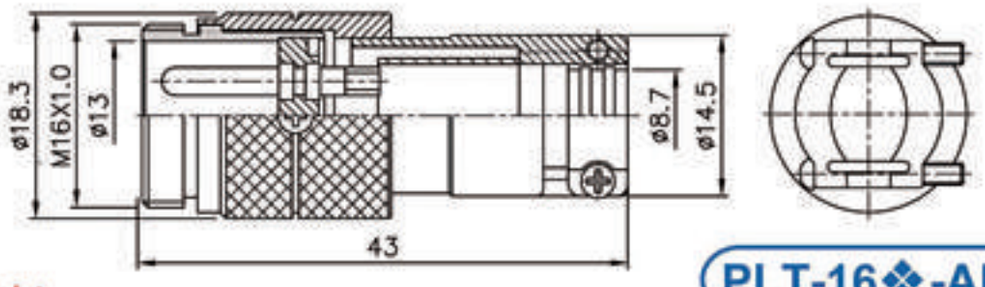

PLT-16❖-ADA-R

(Patent of invention , all rights reserved 專利產品、仿冒必究)

❖ No. of contacts	2	3	4	5	6	7	8	
Contacts Configuration	 TÜV	 TÜV	 TÜV	 TÜV	 TÜV	 TÜV	 TÜV	
Rated current / voltage	5A 125V	5A 125V	5A 125V	5A 125V	5A 125V	5A 125V	5A 125V	
Operating voltage limit (AC.V.rms)	200	200	200	200	200	200	200	
Withstanding voltage (AC.V.rms) 1 minute	1000	1000	1000	1000	1000	1000	1000	
Insulation resistance (MΩ MIN.) at DC 500V	1000	1000	1000	1000	1000	1000	1000	
Contact resistance (mΩ MAX.) at DC 1A	3	3	3	3	3	3	3	
Solder inter diameter	1.4	1.4	1.4	1.2	0.8	0.8	0.8	

PLT SINCE 1978

● 以上機種可設計防水型 Above models could be altered to waterproof types IP65 IP67 IP68

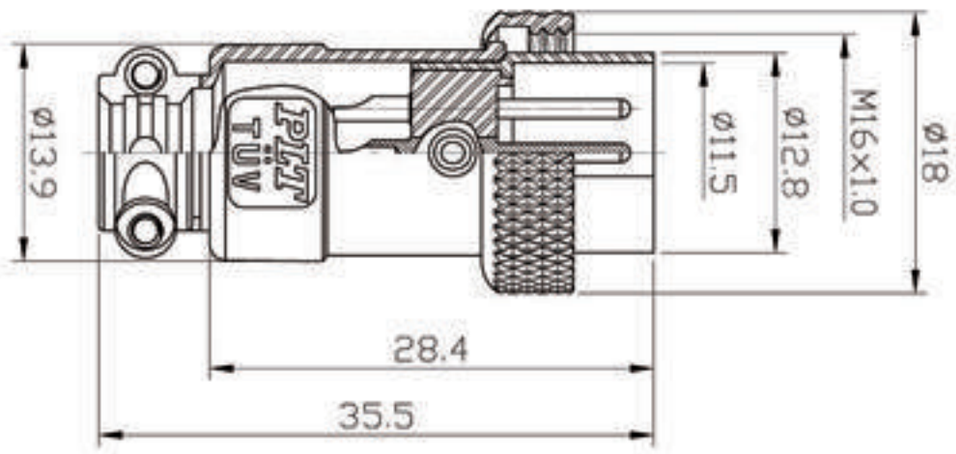

PLT-16❖-PM-R

PM

RLF

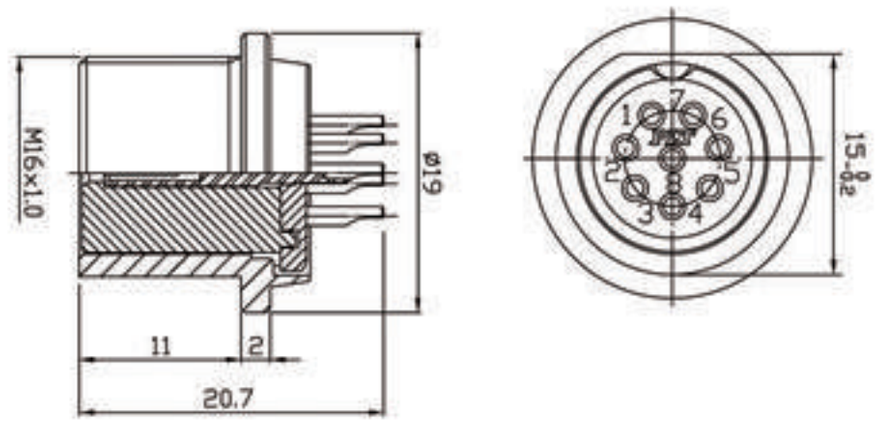

PLT-16❖-RLF-R

RF

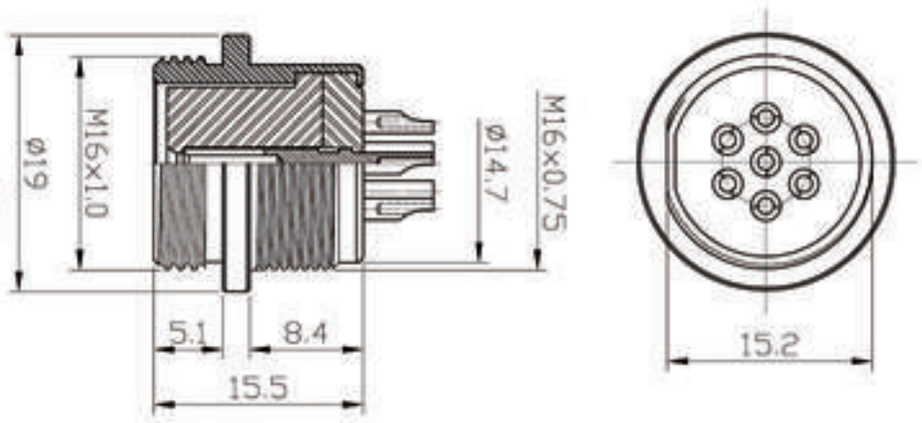

PLT-16❖-RF-R

❖ No. of contacts	2	3	4	5	6	7	8	
Contacts Configuration								
Rated current / voltage	5A 125V	5A 125V	5A 125V	5A 125V	5A 125V	5A 125V	5A 125V	
Operating voltage limit (AC.V.rms)	200	200	200	200	200	200	200	
Withstanding voltage (AC.V.rms) 1 minute	1000	1000	1000	1000	1000	1000	1000	
Insulation resistance (MΩ MIN.) at DC 500V	1000	1000	1000	1000	1000	1000	1000	
Contact resistance (mΩ MAX.) at DC 1A	3	3	3	3	3	3	3	
Solder inter diameter	1.4	1.4	1.4	1.2	0.8	0.8	0.8	

● 以上機種可設計防水型 Above models could be altered to waterproof types IP65 IP67 IP68

SHELL SIZE

16A

Output Type

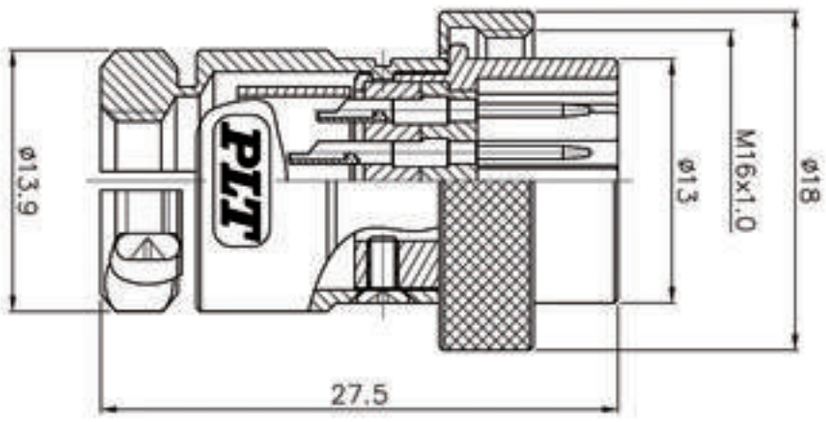

PLT-16❖A-PM-R

PLT- 16A Series

PM

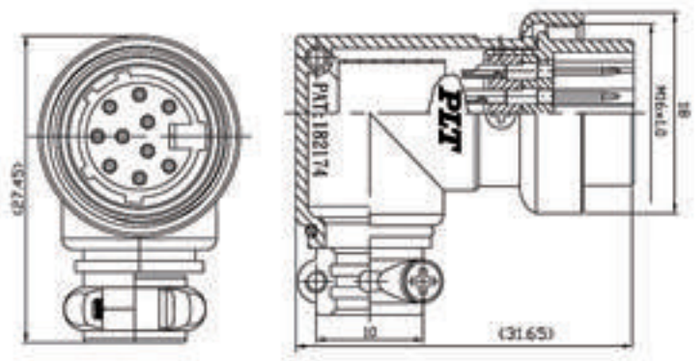

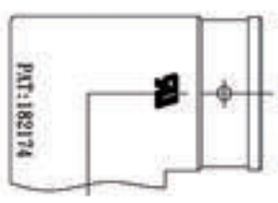

LPM-R

PLT-16❖A-LPM-R

RF

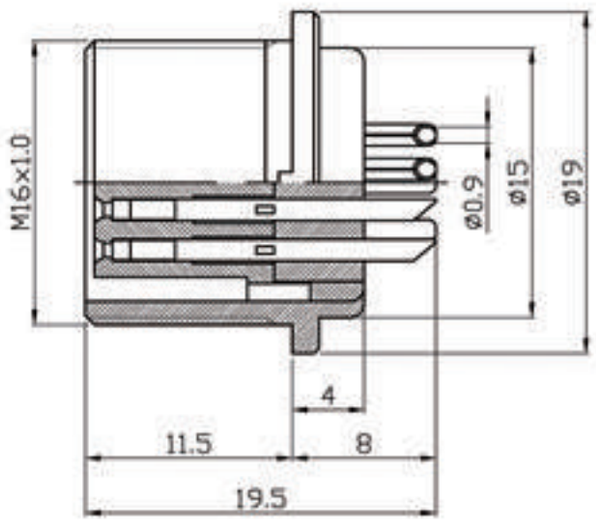

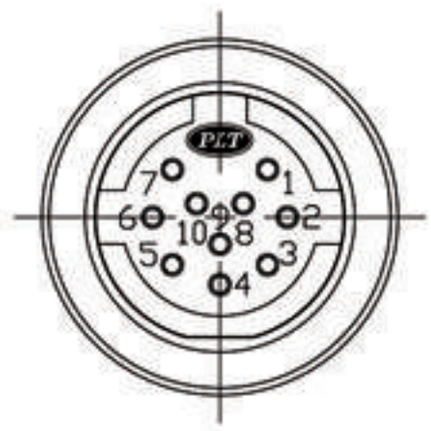

PLT-16❖A-RF-R

❖ No. of contacts	10							
Contacts Configuration								
Withstanding voltage (AC.V.rms) 1 minute	1000							
Insulation resistance (MΩ MIN.) at DC 500V	100							
Contact resistance (mΩ MAX.) at DC 1A	10							

PLT SINCE 1978

● 以上機種可設計防水型 Above models could be altered to waterproof types IP65 IP67 IP68

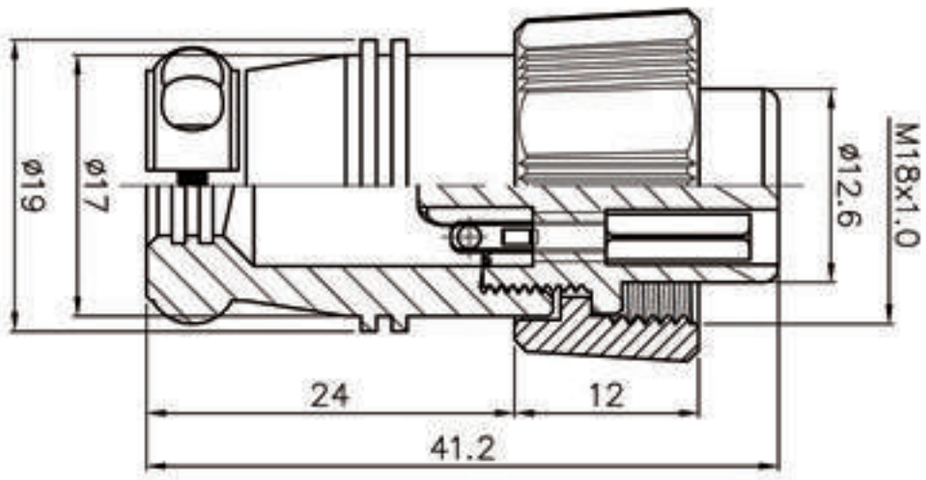

PLT-17❖-P-R

PLT- 17 Series

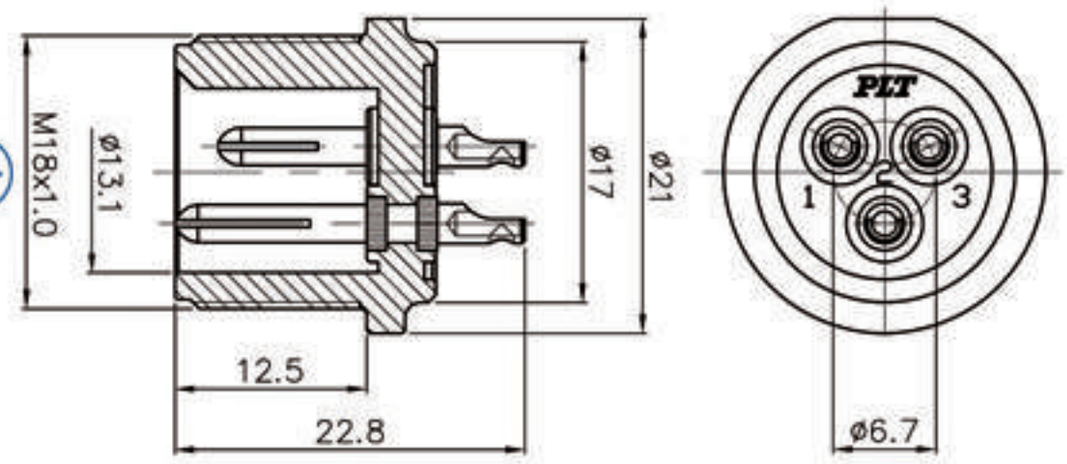

PLT-17❖-R-R

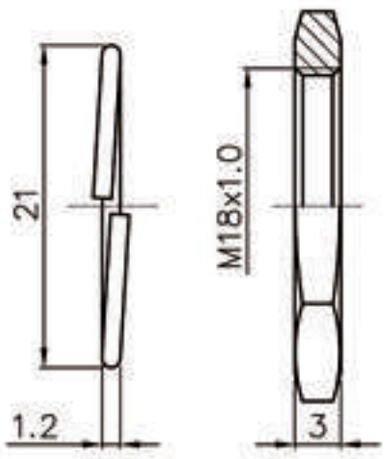

ACCESSORIES

(Engineering Plastic 工程塑膠)

❖ No. of contacts	2	3	4	5	6	7	8	
Contacts Configuration								
Rated current / voltage	5A 125V	5A 125V	5A 125V	5A 125V	5A 125V	5A 125V	5A 125V	
Operating voltage limit (AC.V.rms)	200	200	200	200	200	200	200	
Withstanding voltage (AC.V.rms) 1 minute	1000	1000	1000	1000	1000	1000	1000	
Insulation resistance (MΩ MIN.) at DC 500V	1000	1000	1000	1000	1000	1000	1000	
Contact resistance (mΩ MAX.) at DC 1A	3	3	3	3	3	3	3	
Solder inter diameter	1.4	1.4	1.4	1.2	0.8	0.8	0.8	

● 以上機種可設計防水型 Above models could be altered to waterproof types IP65 IP67 IP68

Input Type / Output Type

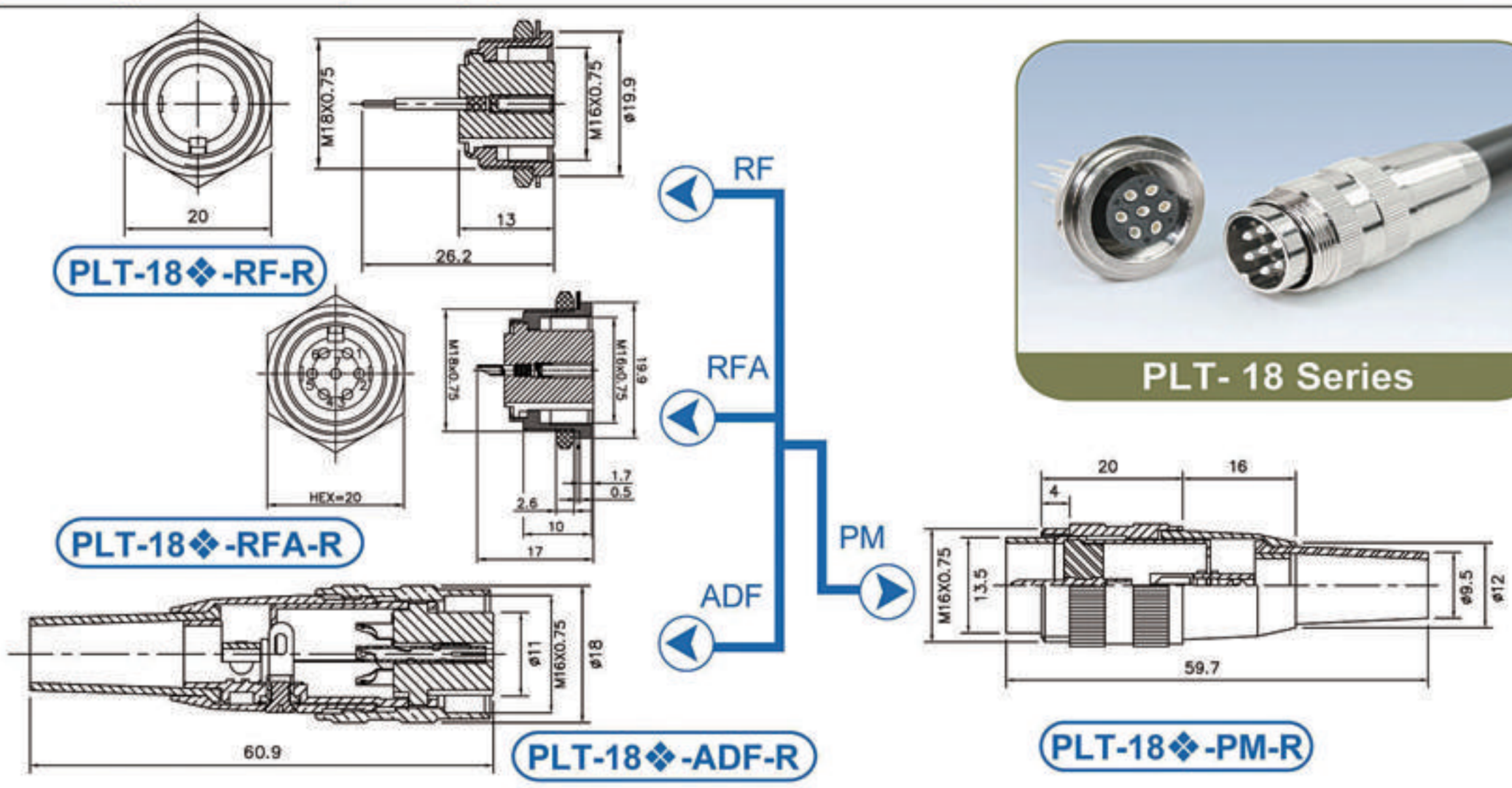

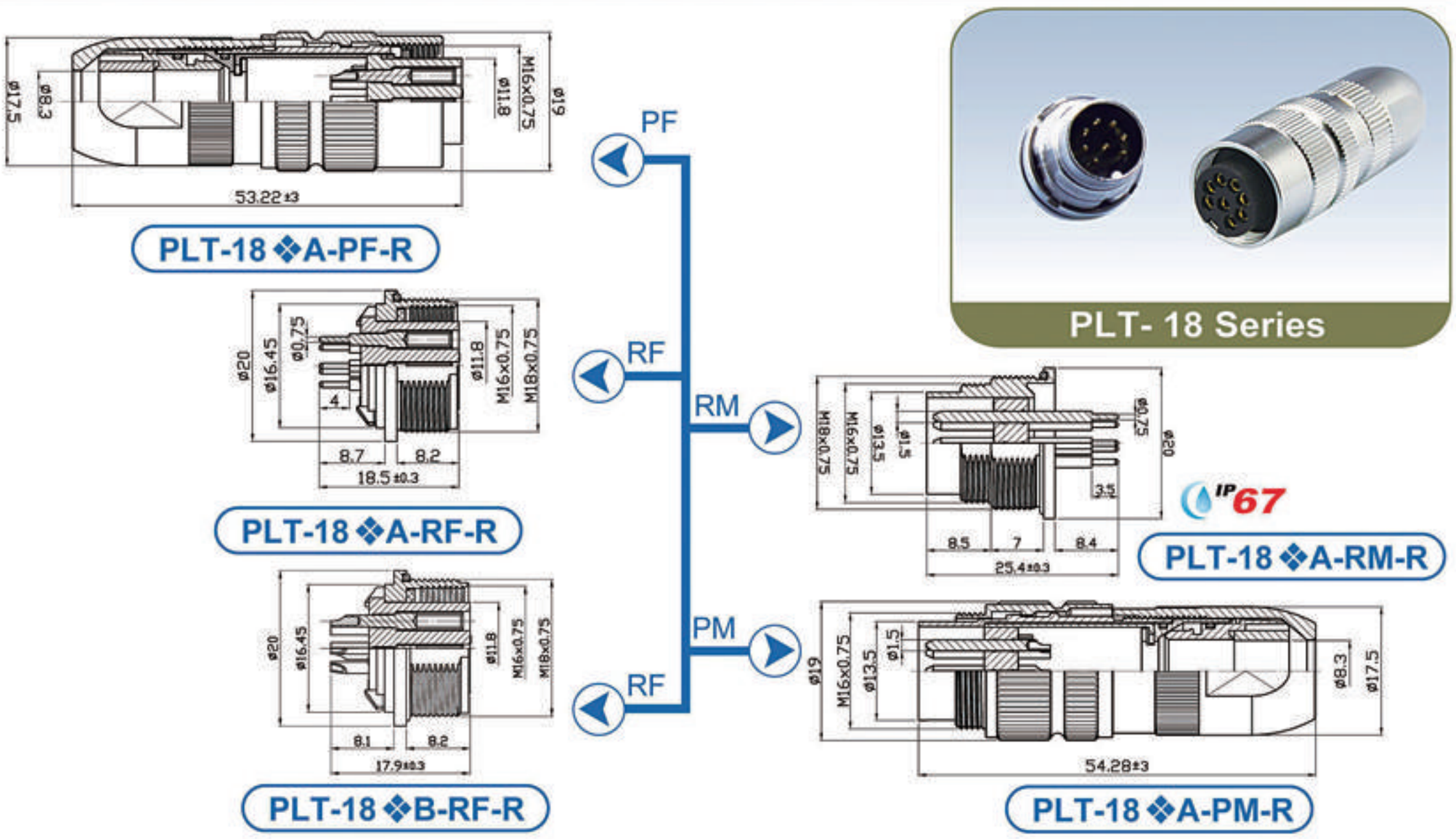

❖ No. of contacts	5	7	8			
Contacts Configuration	TÜV	TÜV	TÜV			
Rated current / voltage	5A 125V	5A 125V	5A 125V			
Operating voltage limit (AC.V.rms)	200	200	200			
Withstanding voltage (AC.V.rms) 1 minute	1000	1000	1000			
Insulation resistance (MΩ MIN.) at DC 500V	1000	1000	1000			
Contact resistance (mΩ MAX.) at DC 1A	3	3	3			
Solder inter diameter	1.55	1.55	1.55			

● 以上機種可設計防水型 Above models could be altered to waterproof types IP65 IP67 IP68

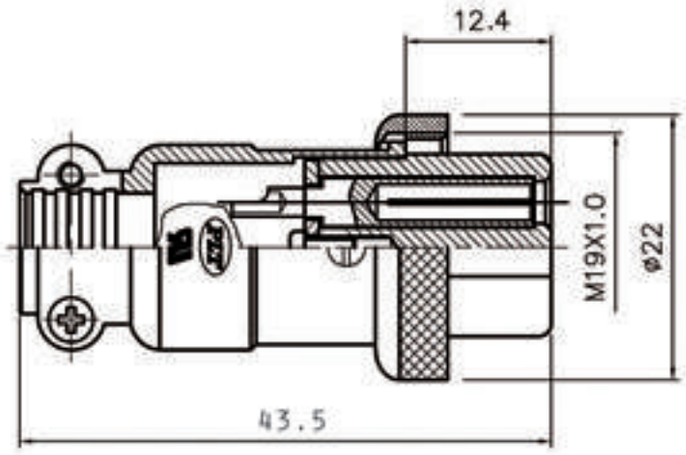

PLT-19❖-P-R

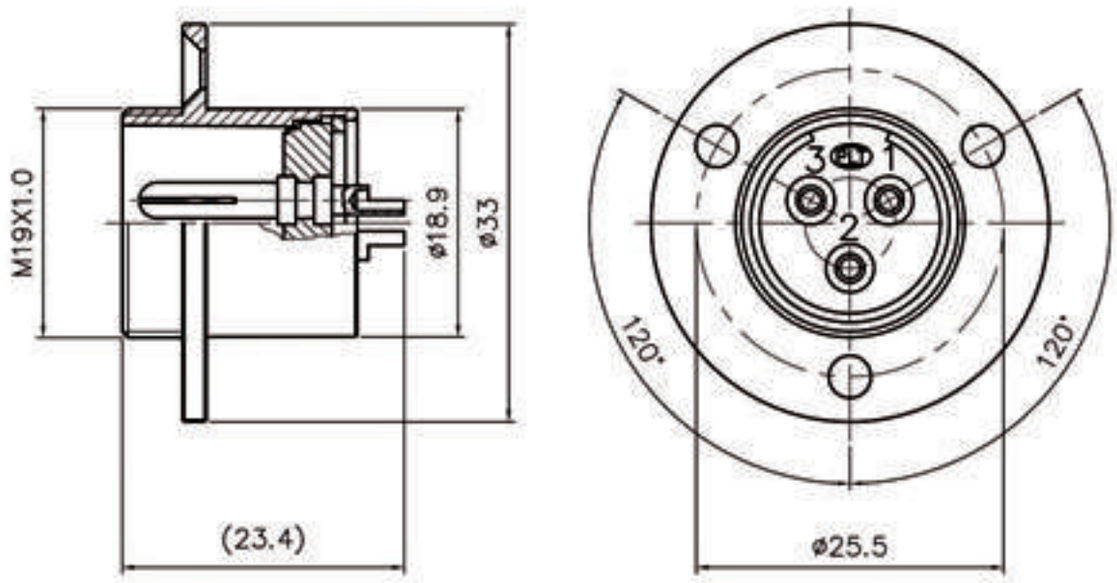

PLT-19❖-R-R

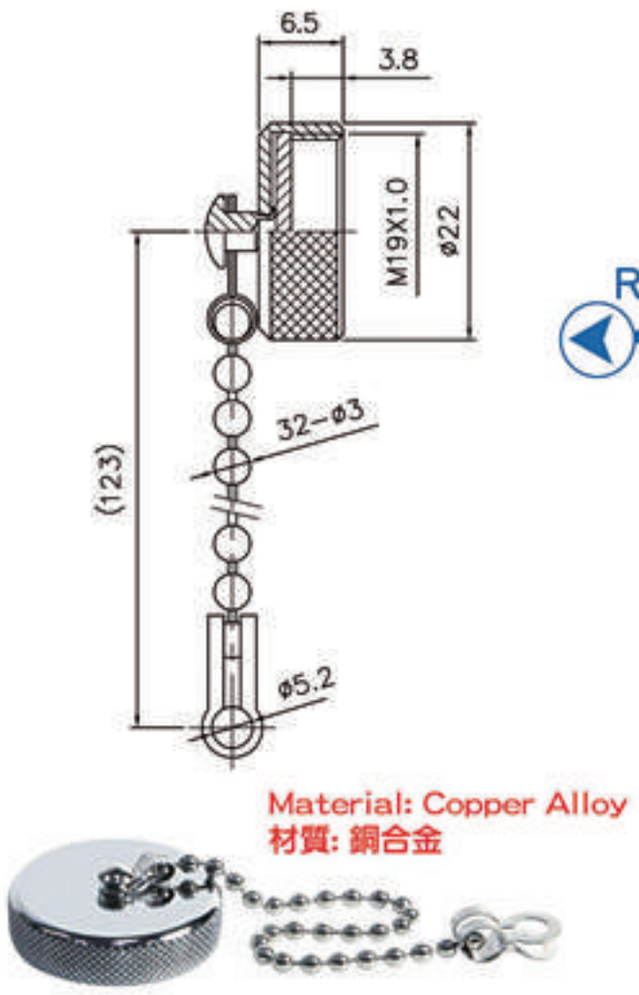

PLT-19-RCa-R

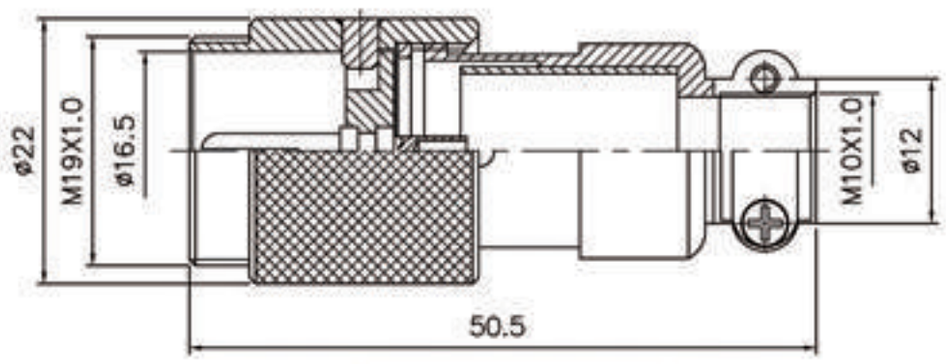

PLT-19❖-AD-R

❖ No. of contacts	2	3	4			
Contacts Configuration	TÜV	TÜV	TÜV			
Rated current / voltage	7A 250V	7A 250V	7A 250V			
Operating voltage limit (AC.V.rms)	250	250	250			
Withstanding voltage (AC.V.rms) 1 minute	1000	1000	1000			
Insulation resistance (MΩ MIN.) at DC 500V	1000	1000	1000			
Contact resistance (mΩ MAX.) at DC 1A	3	3	3			
Solder inter diameter	1.7	1.7	1.7			

● 以上機種可設計防水型 Above models could be altered to waterproof types IP65 IP67 IP68

Input Type

PLT- 25 Series

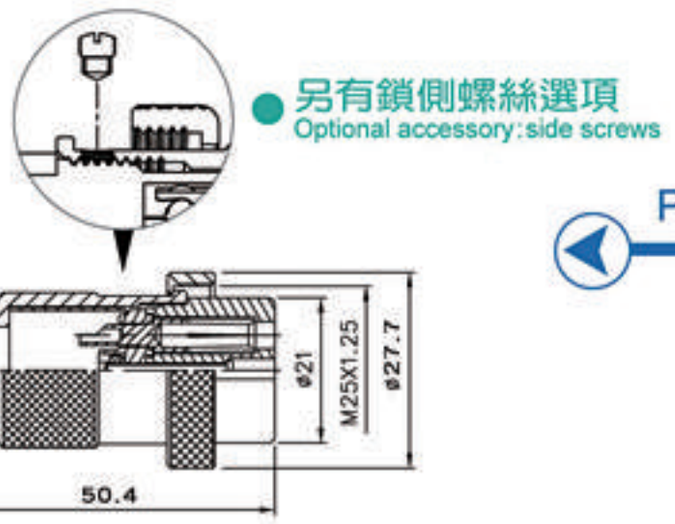

PLT-25❖-P-R

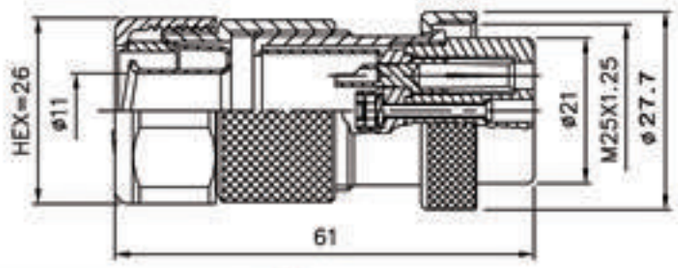

PLT-25❖-GP3-R 3=轉接3/8"軟管
Connected with 3/8"conduit

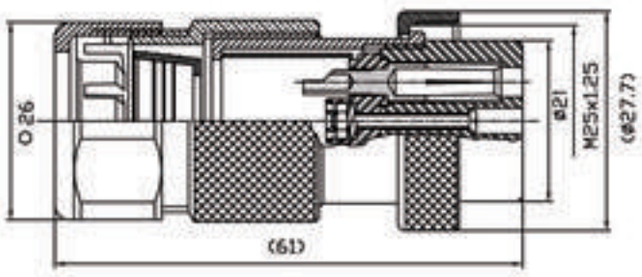

PLT-25❖-WGPF3-R 3=轉接3/8"尼龍管
Connected with 3/8"nylon tube

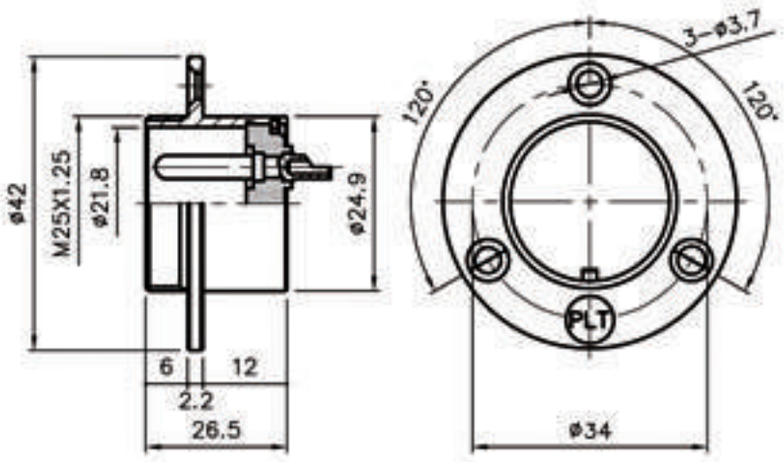

PLT-25❖-R-R

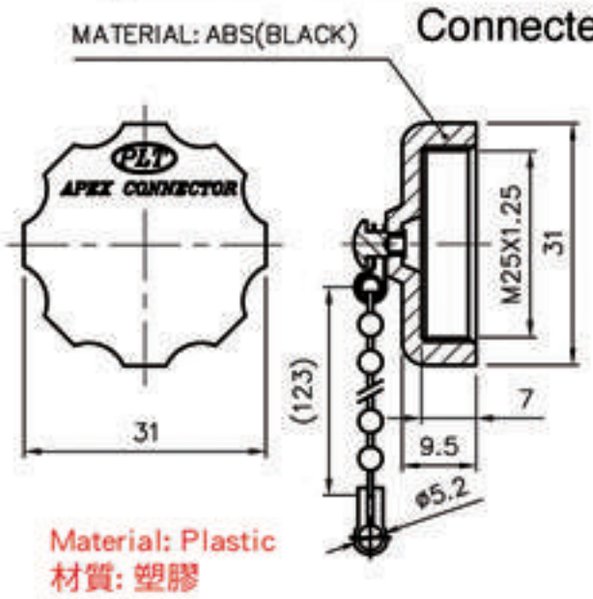

Material: Plastic
材質: 塑膠

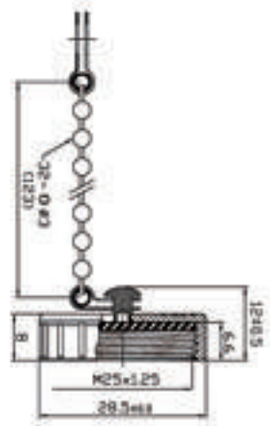

Material: Zinc Alloy
材質: 鋅合金

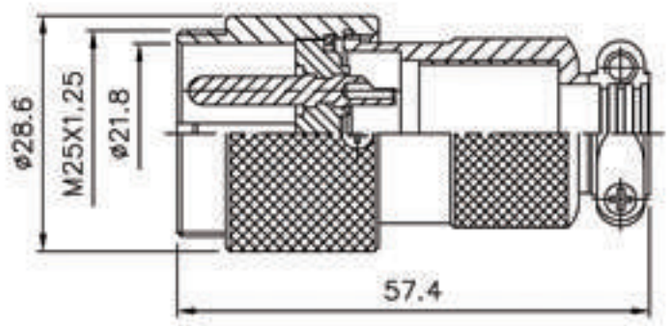

PLT-25❖-AD-R

PAT PLT-25A-RCa-R

PLT-25C-RCa-R

Material: Plastic
材質: 塑膠

PAT A-590PX

本件加值不加價
Value-Added with the Same Price

❖ No. of contacts	2	3	4	5	6	
Contacts Configuration	TÜV	TÜV	TÜV	TÜV	TÜV	
Rated current / voltage	10A 250V	10A 250V	10A 250V	10A 250V	10A 250V	
Operating voltage limit (AC.V.rms)	400	400	400	400	300	
Withstanding voltage (AC.V.rms) 1 minute	2000	2000	2000	1800	1800	
Insulation resistance (MΩ MIN.) at DC 500V	2000	2000	2000	2000	2000	
Contact resistance (mΩ MAX.) at DC 1A	3	3	3	3	3	
Solder inter diameter	1.9	1.9	1.9	1.9	1.9	

● 以上機種可設計防水型 Above models could be altered to waterproof types IP65 IP67 IP68

PLT- 25 Series

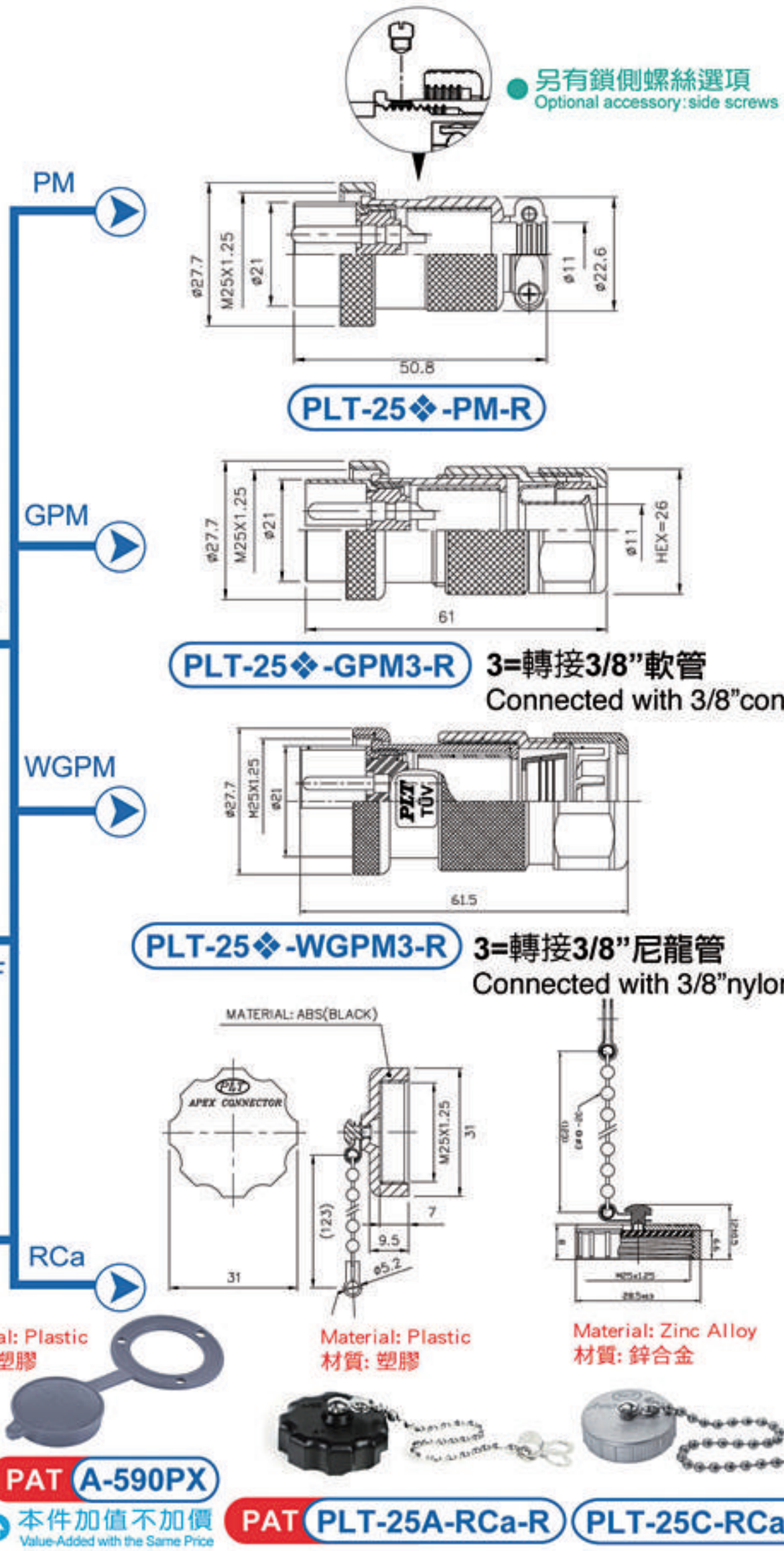

❖ No. of contacts	2	3	4	5	6	
Contacts Configuration	TÜV	TÜV	TÜV	TÜV	TÜV	
Rated current / voltage	10A 250V	10A 250V	10A 250V	10A 250V	10A 250V	
Operating voltage limit (AC.V.rms)	400	400	400	400	300	
Withstanding voltage (AC.V.rms) 1 minute	2000	2000	2000	1800	1800	
Insulation resistance (MΩ MIN.) at DC 500V	2000	2000	2000	2000	2000	
Contact resistance (mΩ MAX.) at DC 1A	3	3	3	3	3	
Solder inter diameter	1.9	1.9	1.9	1.9	1.9	

● 以上機種可設計防水型 Above models could be altered to waterproof types IP65 IP67 IP68

Input Type IP65 PAT

TÜV

PLT- 25A Series

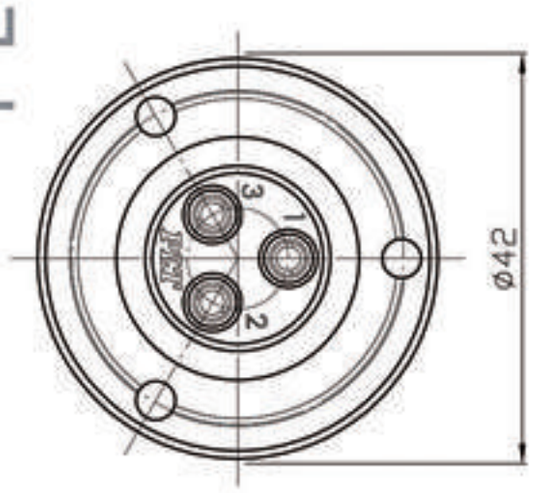

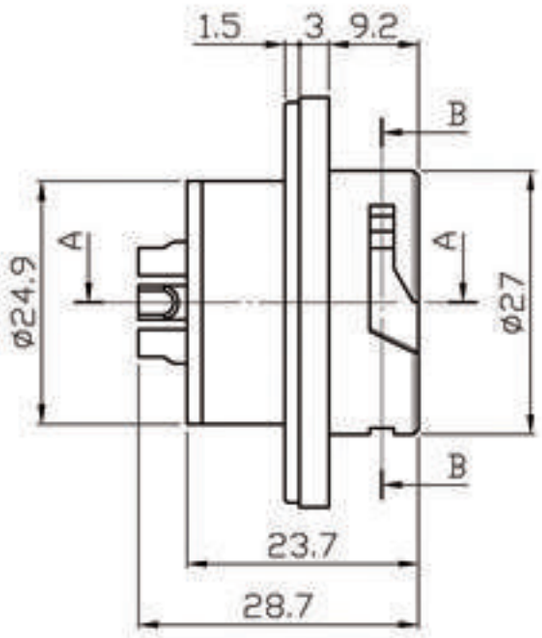

PLT-25❖A-R-R

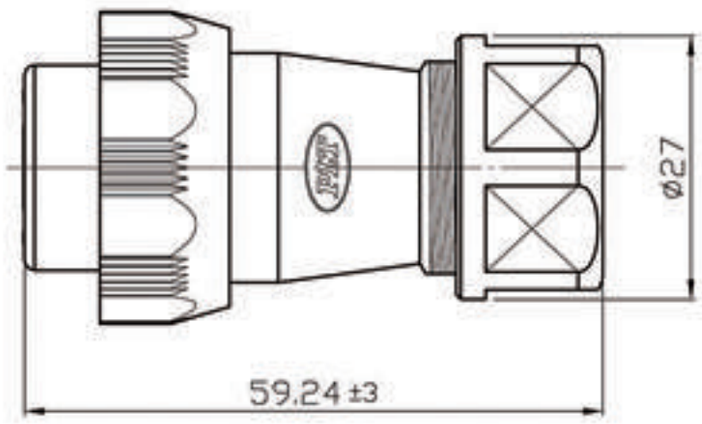

PLT-25❖A-P-R

(Engineering Plastic 工程塑膠)

❖ No. of contacts	3	4				
Contacts Configuration						
Rated current / voltage	10A 250V	10A 250V				
Operating voltage limit (AC.V.rms)	200	200				
Withstanding voltage (AC.V.rms) 1 minute	1000	1000				
Insulation resistance (MΩ MIN.) at DC 500V	1000	1000				
Contact resistance (mΩ MAX.) at DC 1A	3	3				
Solder inter diameter						

PLT SINCE 1978

● 以上機種可設計防水型 Above models could be altered to waterproof types IP65 IP67 IP68

SHELL SIZE

30

TÜV

Input Type

另有鎖側螺絲選項
Optional accessory: side screws

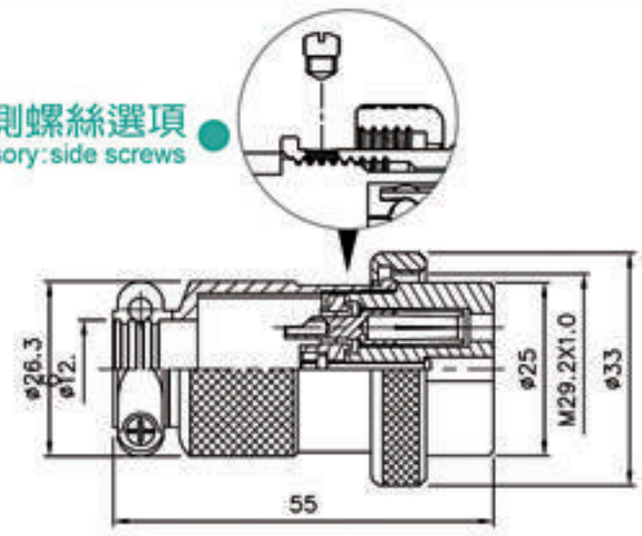

PLT-30❖-P-R

PLT- 30 Series

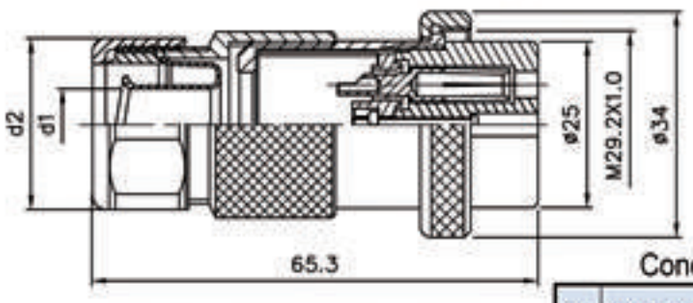

PLT-30❖-GP❖-R

Conduit

		d1	d2
3	3/8" 軟管	ø10.8	ø26.3
4	1/2" 軟管	ø14.3	ø31.2

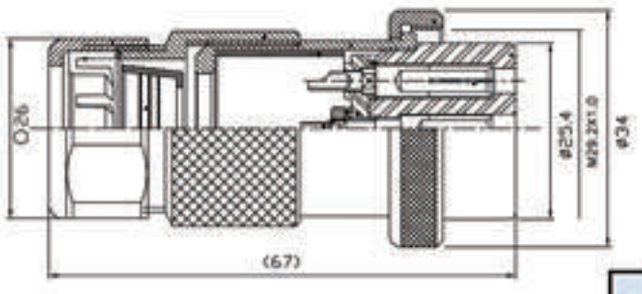

PLT-30❖-WGP❖-R

Nylon Tube

		d1	d2
3	3/8" 尼龍管	ø10.8	ø26.3
4	1/2" 尼龍管	ø14.3	ø31.2

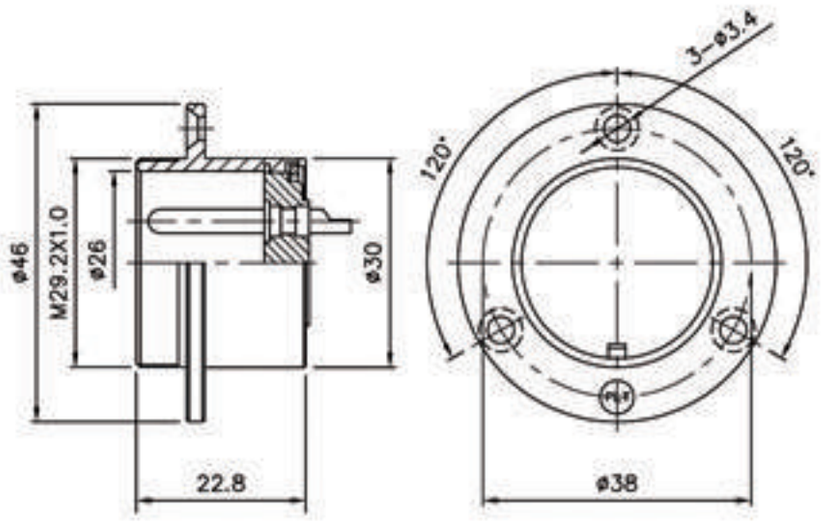

PLT-30❖-R-R

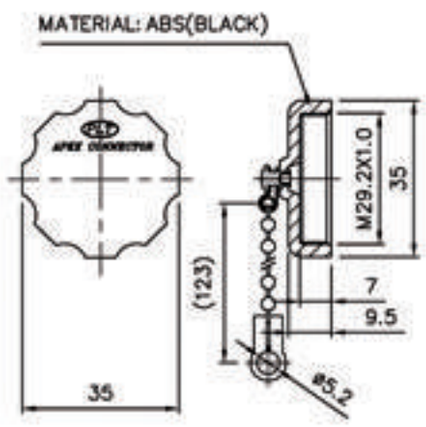

Material: Plastic
材質: 塑膠

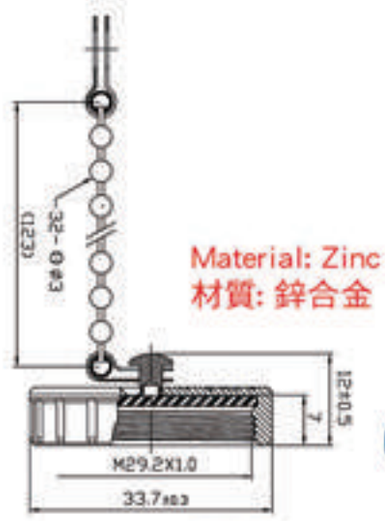

Material: Zinc Alloy
材質: 鋅合金

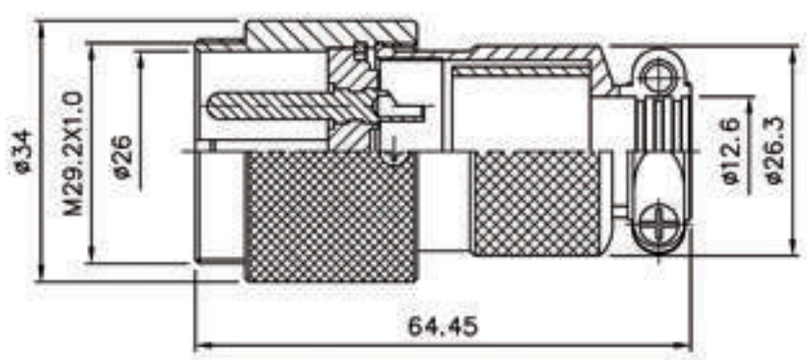

PLT-30❖-AD-R

PAT PLT-30A-RCa-R

PLT-30C-RCa-R

Material: Plastic
材質: 塑膠

PAT A-591PX 本件加值不加價
Value-Added with the Same Price

No. of contacts	2	3	4	5	8	
Contacts Configuration	TÜV UL	TÜV UL	TÜV UL	TÜV UL	TÜV UL	
Rated current / voltage	15A 250V	15A 250V	15A 250V	15A 250V	10A 250V	
Operating voltage limit (AC.V.rms)	400	400	400	400	300	
Withstanding voltage (AC.V.rms) 1 minute	2000	2000	2000	1800	1800	
Insulation resistance (MΩ MIN.) at DC 500V	2000	2000	2000	2000	2000	
Contact resistance (mΩ MAX.) at DC 1A	3	3	3	3	3	
Solder inter diameter	2.8	2.8	2.8	2.8	2.5	

● 以上機種可設計防水型 Above models could be altered to waterproof types IP65 IP67 IP68

Output Type

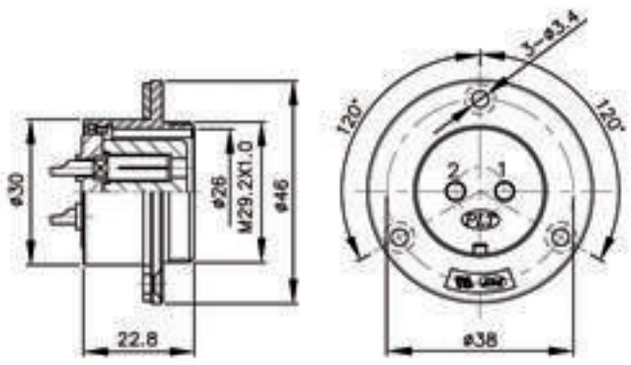

PLT-30❖-RF-R

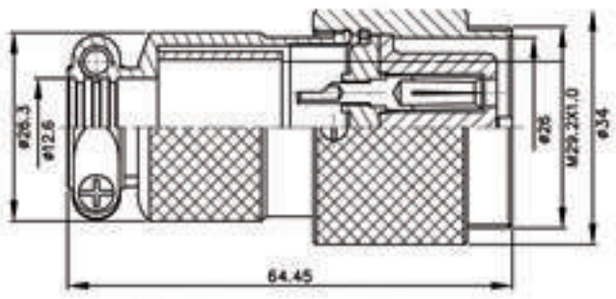

PLT-30❖-ADF-R

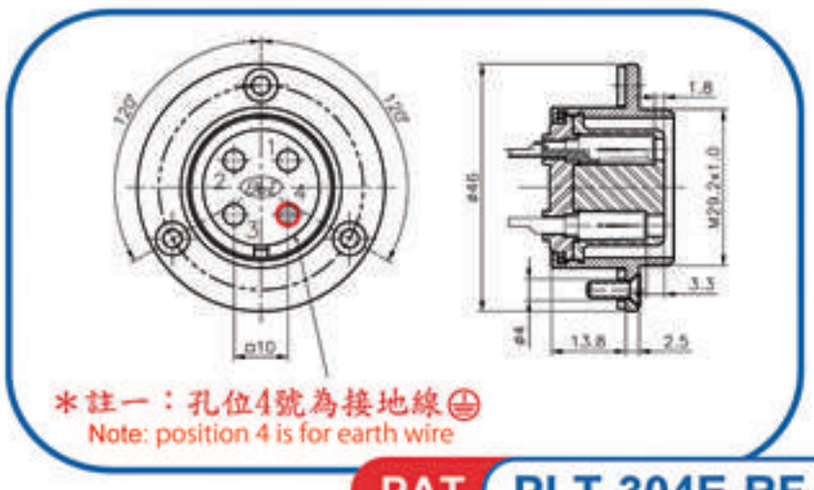

＊註一：孔位4號為接地線
Note: position 4 is for earth wire

PAT PLT-304E-RF-R

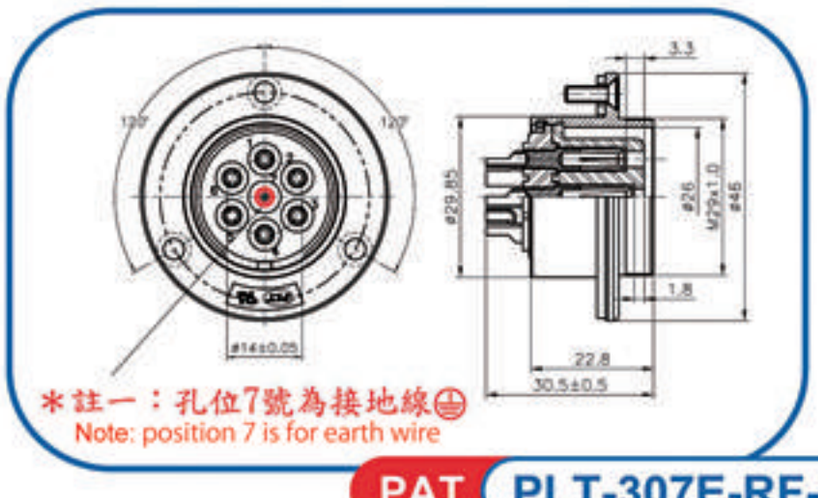

＊註一：孔位7號為接地線
Note: position 7 is for earth wire

PAT PLT-307E-RF-R

PLT- 30 Series

● 另有鎖側螺絲選項
Optional accessory: side screws

RF

ADF

PM

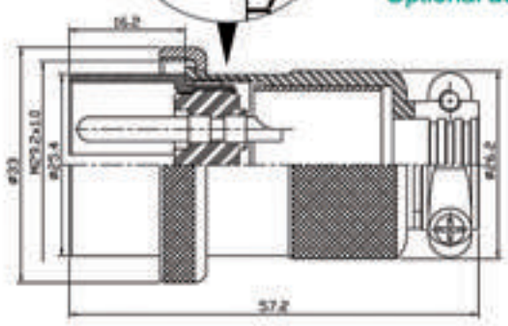

PLT-30❖-PM

GPM

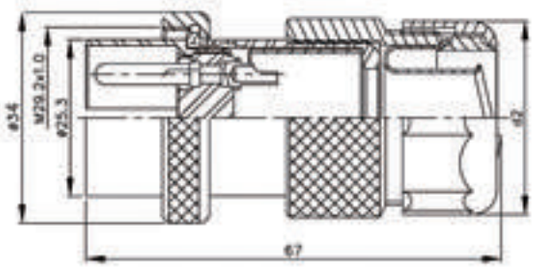

Conduit

3	3/8" 軟管	d1 ø10.8	d2 ø26.3
4	1/2" 軟管	d1 ø14.3	d2 ø31.2

PLT-30❖-GPM❖

WGPM

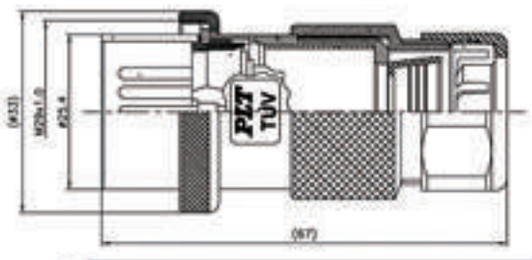

Nylon Tube

3	3/8" 尼龍管	d1 ø10.8	d2 ø26.3
4	1/2" 尼龍管	d1 ø14.3	d2 ø31.2

PLT-30❖-WGPM❖-R

RCa

Material: Plastic
材質: 塑膠

PAT A-591PX

本件加值不加價
Value-Added with the Same Price

Material: Zinc Alloy
材質: 鋅合金

PLT-30C-RCa-R

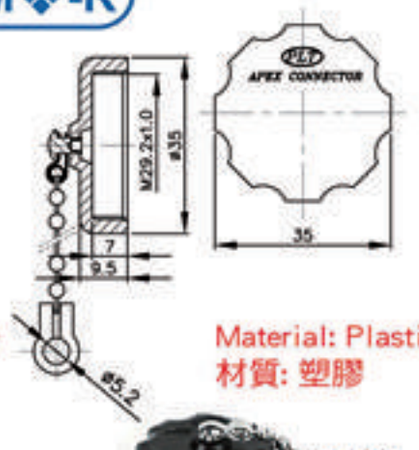

Material: Plastic
材質: 塑膠

PAT PLT-30A-RCa-R

❖ No. of contacts	2	3	4	5	7	8	
Contacts Configuration	TÜV UL	TÜV UL	TÜV UL	TÜV UL	TÜV UL	TÜV UL	
Rated current / voltage	15A 250V	15A 250V	15A 250V	15A 250V	15A 250V	10A 250V	
Operating voltage limit (AC.V.rms)	400	400	400	400	400	300	
Withstanding voltage (AC.V.rms) 1 minute	2000	2000	2000	1800	1800	1800	
Insulation resistance (MΩ MIN.) at DC 500V	2000	2000	2000	2000	2000	2000	
Contact resistance (mΩ MAX.) at DC 1A	3	3	3	3	3	3	
Solder inter diameter	2.8	2.8	2.8	2.8	2	2.5	

● 以上機種可設計防水型 Above models could be altered to waterproof types IP65 IP67 IP68

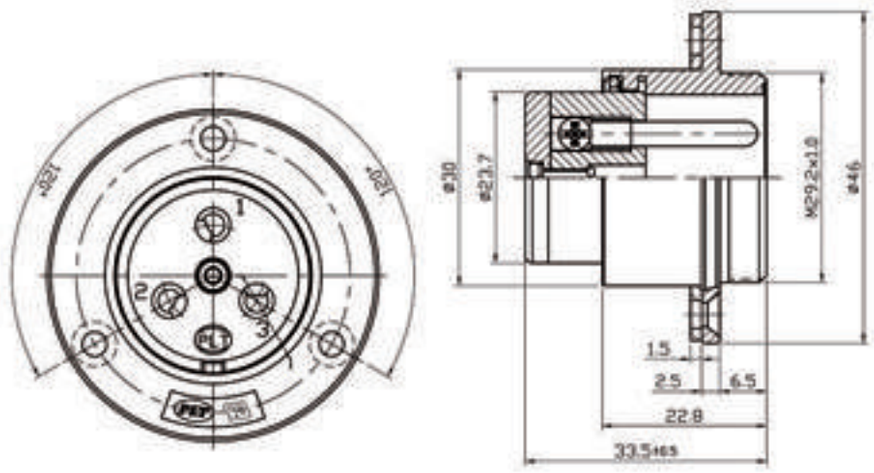

PAT PLT-303-RN-R

PLT- 30 Series

另有鎖側螺絲選項
Optional accessory:side screws

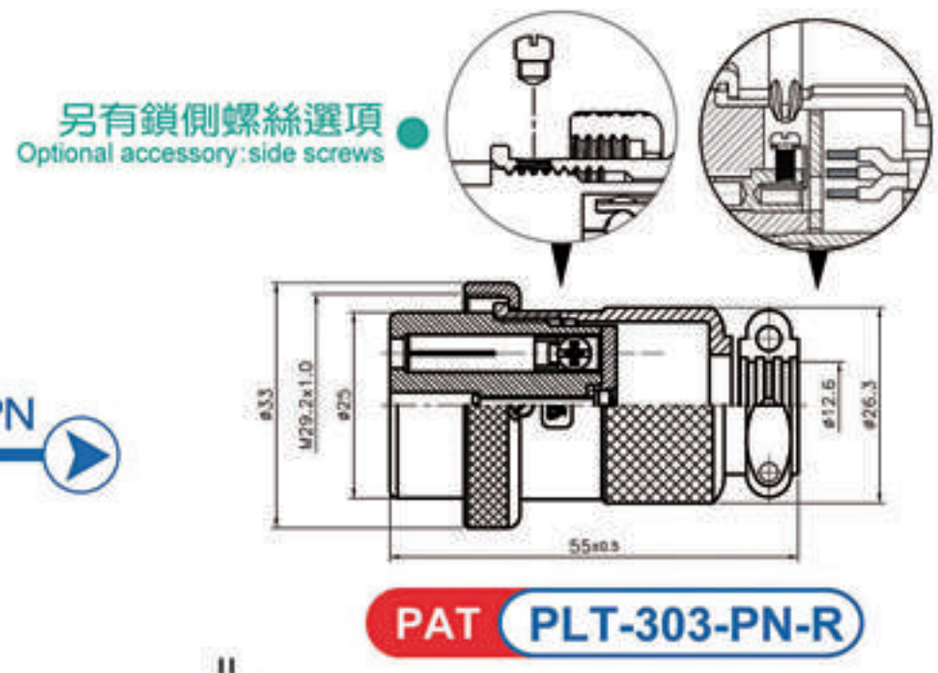

PAT PLT-303-PN-R

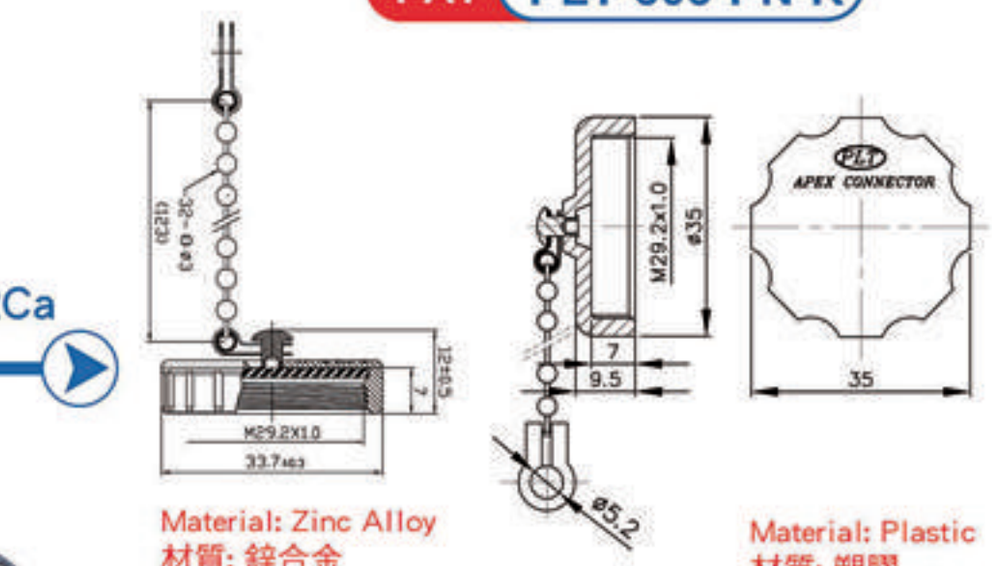

Material: Plastic
材質: 塑膠

Material: Zinc Alloy
材質: 鋅合金

Material: Plastic
材質: 塑膠

Screw-Lockup-Contact Model
螺絲鎖附型

Patent of invention , all rights reserved
專利產品、仿冒必究

PAT A-591PX

本件加值不加價
Value-Added with the Same Price

PLT-30C-RCa-R

PAT PLT-30A-RCa-R

No. of contacts	3					
Contacts Configuration	 TÜV					
Rated current / voltage	15A 250V					
Operating voltage limit (AC.V.rms)	400					
Withstanding voltage (AC.V.rms) 1 minute	2000					
Insulation resistance (MΩ MIN.) at DC 500V	2000					
Contact resistance (mΩ MAX.) at DC 1A	3					
Solder inter diameter	2.8					

● 以上機種可設計防水型 Above models could be altered to waterproof types IP65 IP67 IP68

SHELL SIZE 31

Input Type IP67

TÜV

PLT- 31 Series

SA

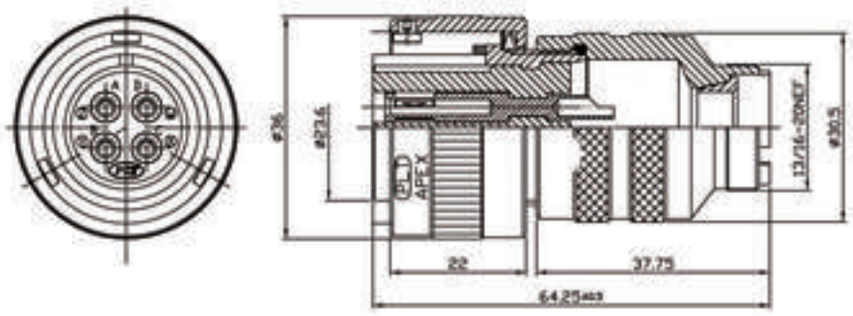

PLT3106A 18-10SA

SC

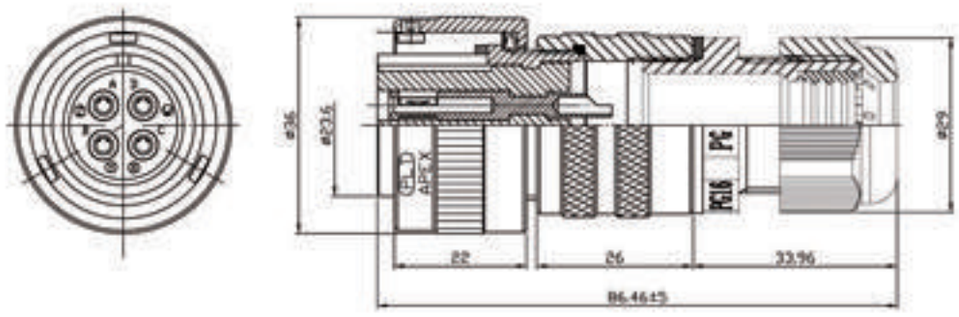

PLT3106A 18-10SC

PA

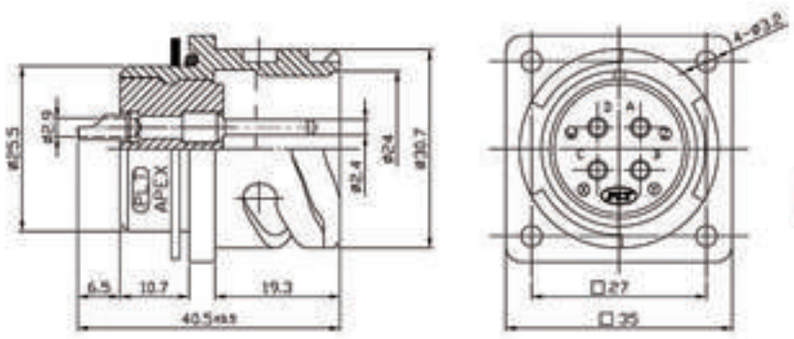

PLT3102A 18-10PA

RCa

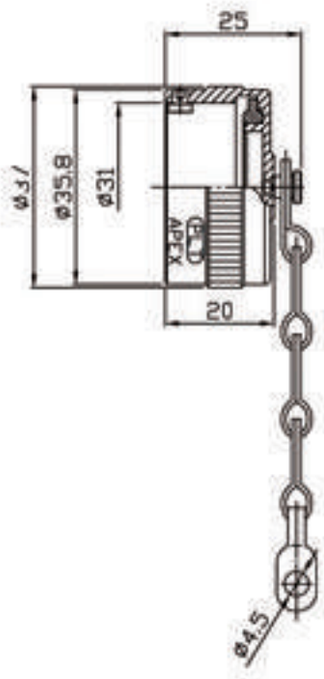

PLT-18RCa

Material: Aluminum Alloy
材質: 鋁合金

No. of contacts	4			
Contacts Configuration				
Operating Voltage	23A DC : 700V AC : 500V			
Withstanding voltage (AC.V.rms) 1 minute	2000			
Insulation resistance (MΩ MIN.) at DC 500V	5000			
Test Current	23			

PLT SINCE 1978

● 以上機種可設計防水型 Above models could be altered to waterproof types IP65 IP67 IP68

PLT- 31 Series

SA

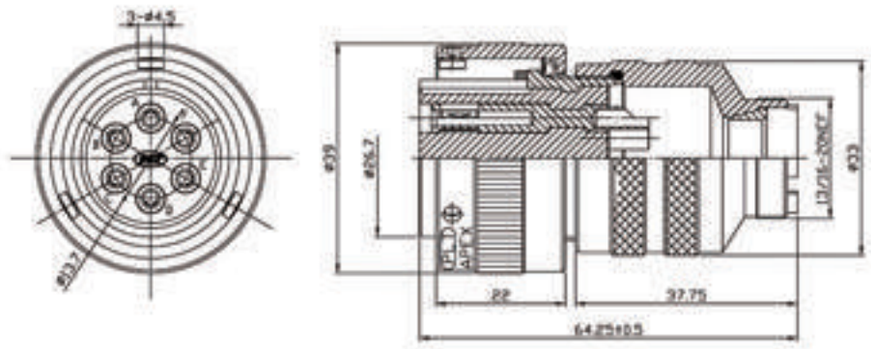

PLT3106A 20-15SA

SC

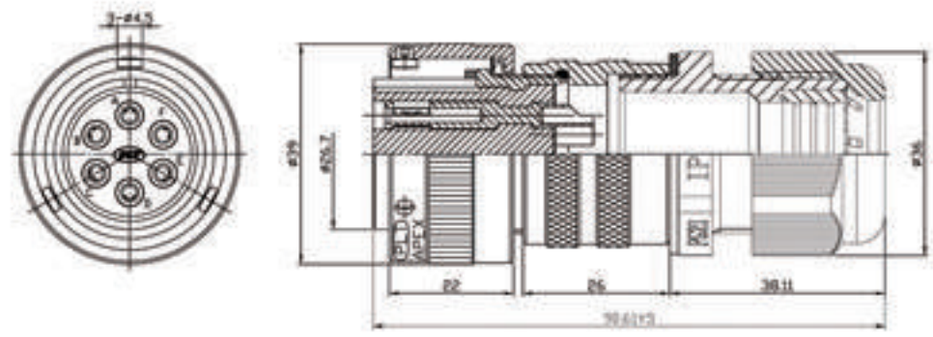

PLT3106A 20-15SC

PA

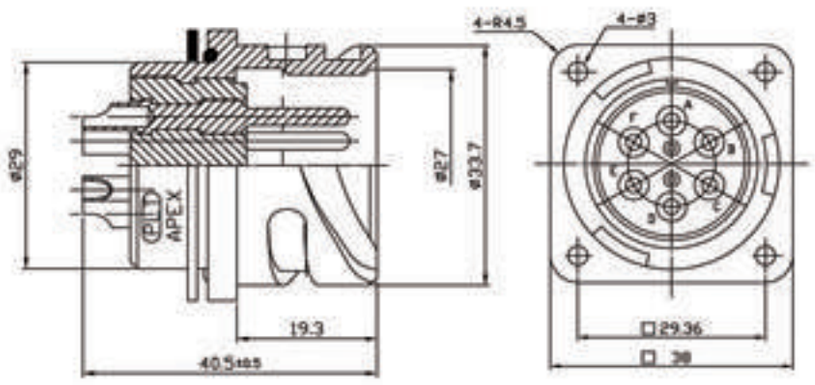

PLT3102A 20-15PA

RCa

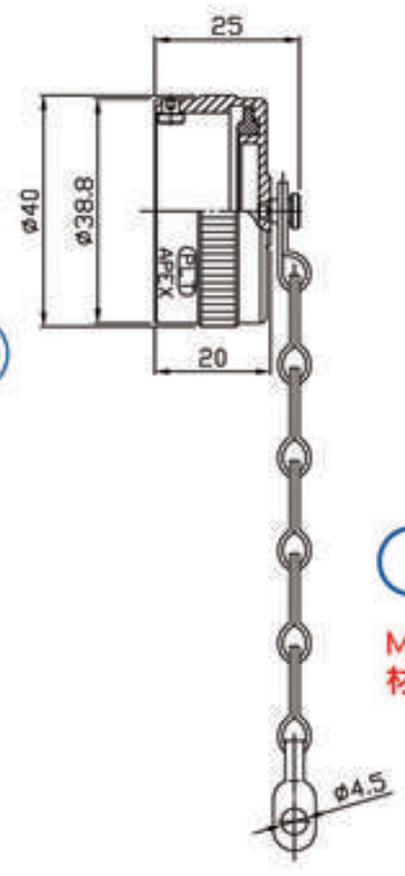

PLT-20RCa

Material: Aluminum Alloy
材質: 鋁合金

No. of contacts	6			
Contacts Configuration				
Operating Voltage	23A DC : 700V AC : 500V			
Withstanding voltage (AC.V.rms) 1 minute	2000			
Insulation resistance (MΩ MIN.) at DC 500V	5000			
Test Current	23			

● 以上機種可設計防水型 Above models could be altered to waterproof types IP65 IP67 IP68

Input Type IP67

PLT- 31 Series

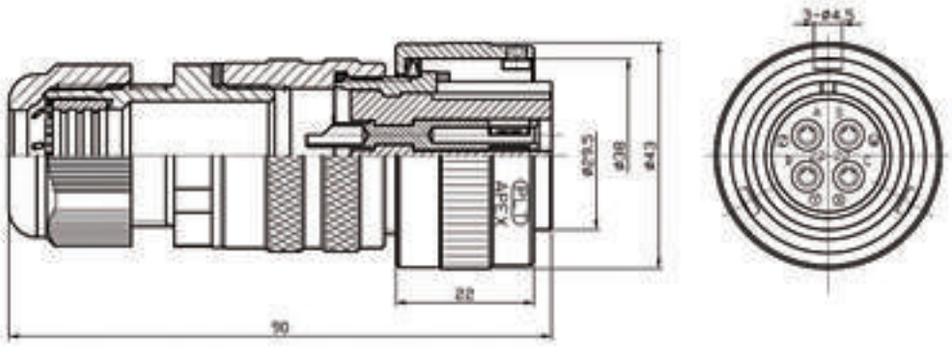

PLT3106A 22-22SC

SC

PA

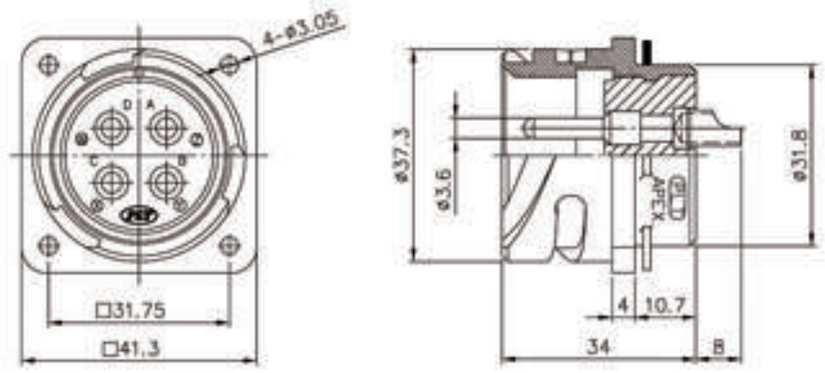

PLT3102A 22-22PA

RCa

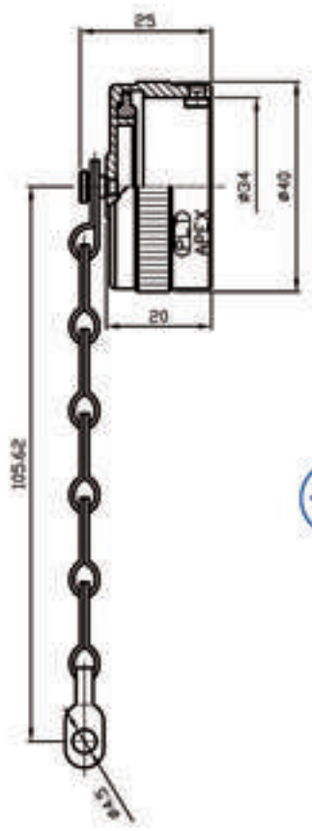

Material: Aluminum Alloy
材質: 鋁合金

PLT-22RCa

No. of contacts	4				
Contacts Configuration					
Operating Voltage	46A DC : 1250V AC : 900V				
Withstanding voltage (AC.V.rms) 1 minute	2000				
Insulation resistance (MΩ MIN.) at DC 500V	5000				
Test Current	23				

PLT SINCE 1978

● 以上機種可設計防水型 Above models could be altered to waterproof types IP65 IP67 IP68

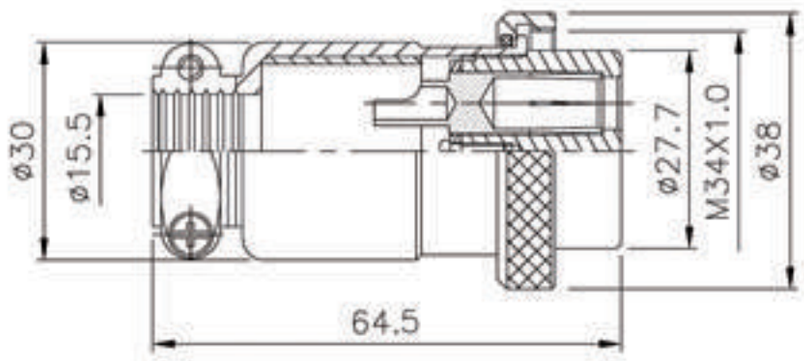

PLT-32❖-P-R

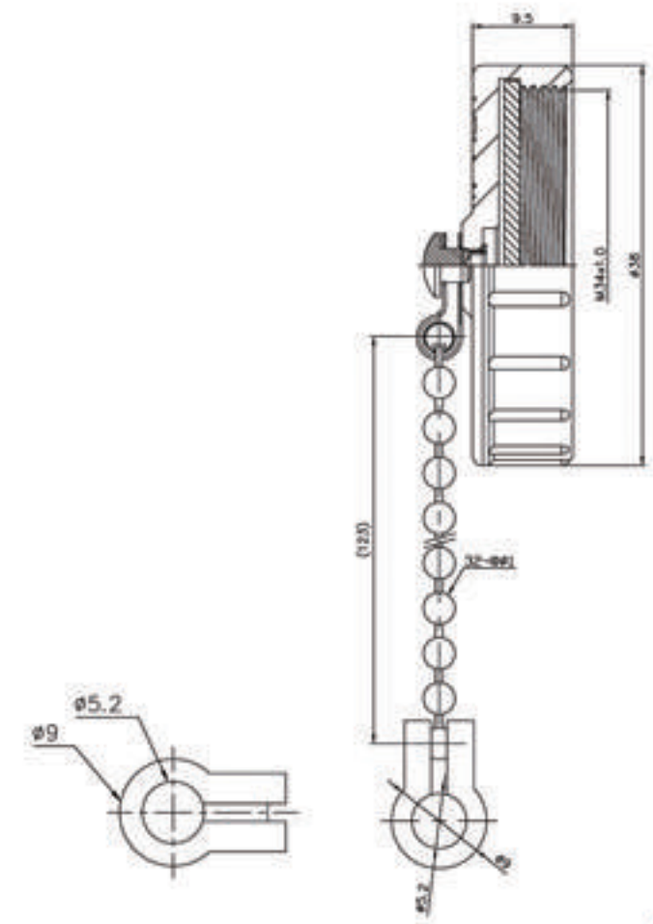

Material: Zinc Alloy
材質: 鋅合金

PLT-32C-RCaN-R

Finish (表面處理) → Nickel-plated / 鍍鎳 / Chrome-plated / 鍍鉻

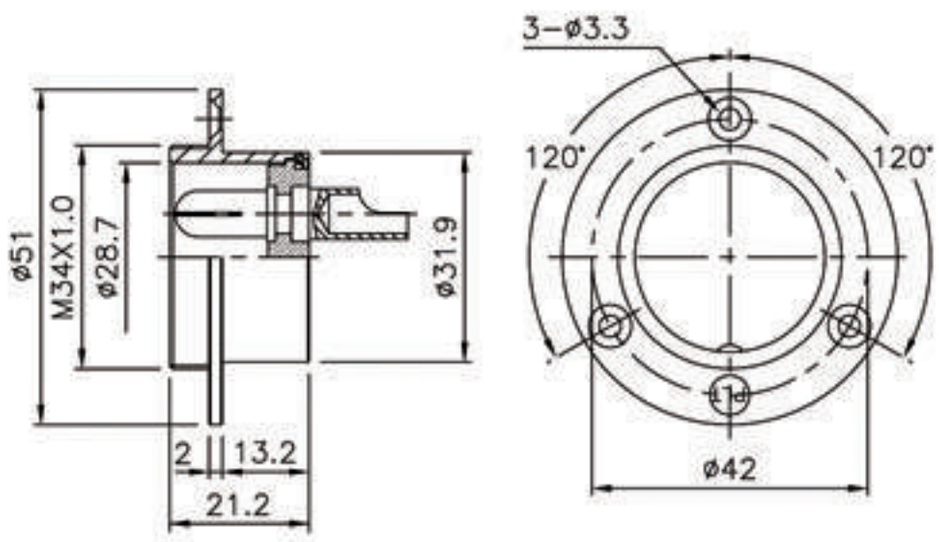

PLT-32❖-R-R

❖ No. of contacts	2	3				
Contacts Configuration	TÜV	TÜV				
Rated current / voltage	30A 250V	30A 250V				
Operating voltage limit (AC.V.rms)	400	400				
Withstanding voltage (AC.V.rms) 1 minute	2000	2000				
Insulation resistance (MΩ MIN.) at DC 500V	2000	2000				
Contact resistance (mΩ MAX.) at DC 1A	5	5				
Solder inter diameter	6	6				

● 以上機種可設計防水型 Above models could be altered to waterproof types IP65 IP67 IP68

Input Type

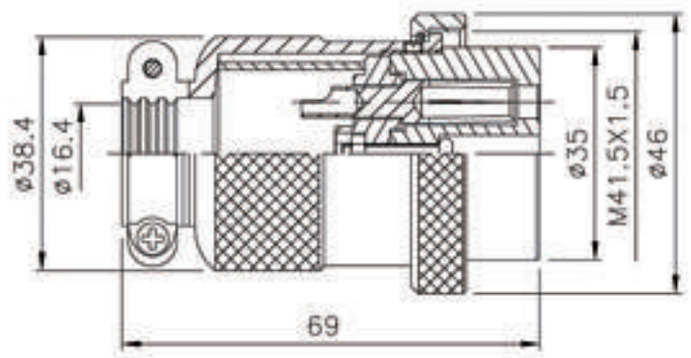

PLT-40❖-P-R

PLT- 40 Series

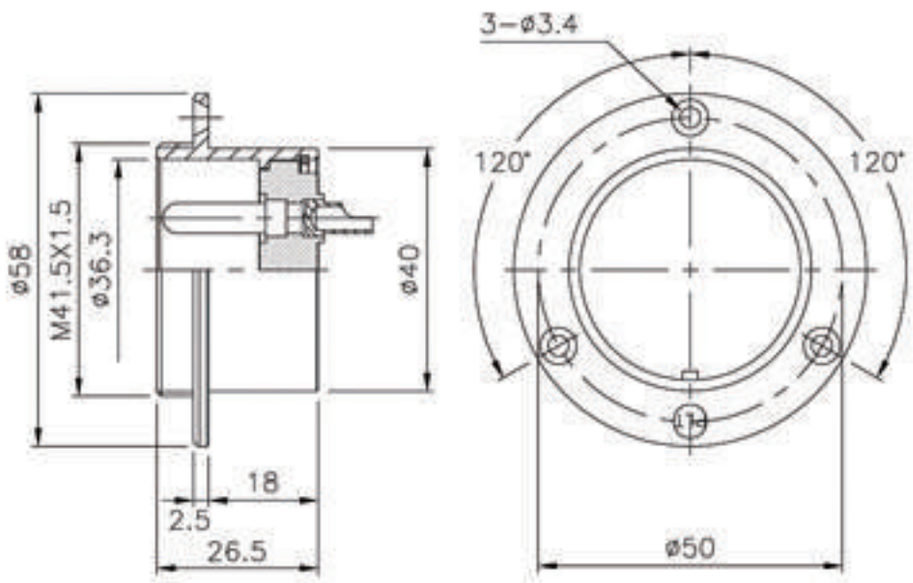

PLT-40❖-R-R

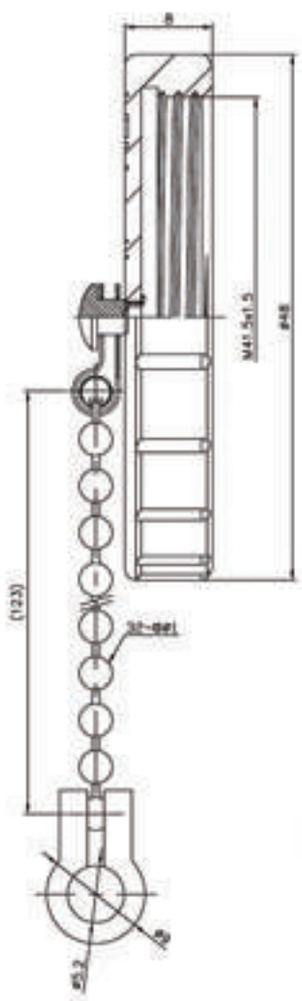

Material: Zinc Alloy
材質: 鋅合金

PLT-40C-RCaC-R

❖ No. of contacts	4	8	37			
Contacts Configuration	TÜV	TÜV	TÜV			
Rated current / voltage	30A 250V	20A 250V	5A 300V			
Operating voltage limit (AC.V.rms)	500	400	300			
Withstanding voltage (AC.V.rms) 1 minute	2500	2000	1000			
Insulation resistance (MΩ MIN.) at DC 500V	2000	2000	1800			
Contact resistance (mΩ MAX.) at DC 1A	3	3	3			
Solder inter diameter	4	4.8	1.9			

● 以上機種可設計防水型 Above models could be altered to waterproof types IP65 IP67 IP68

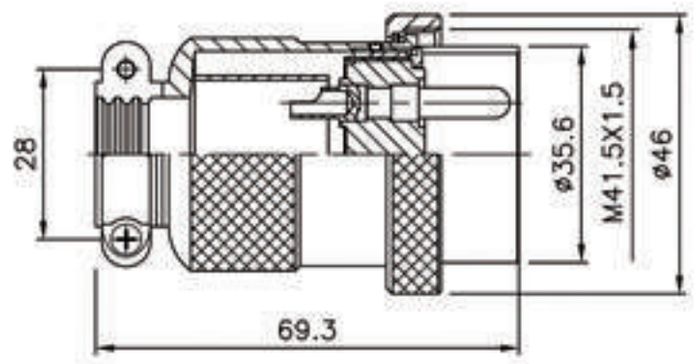

PM

PLT-40❖-PM-R

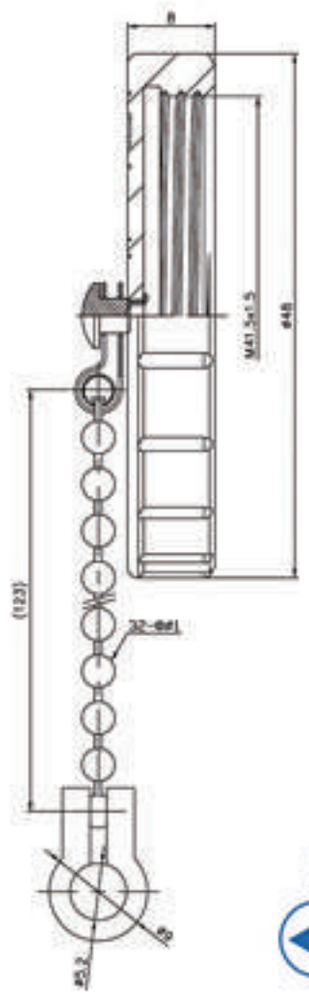

RCaC

PLT-40C-RCaC-R

Material: Zinc Alloy
材質: 鋅合金

RF

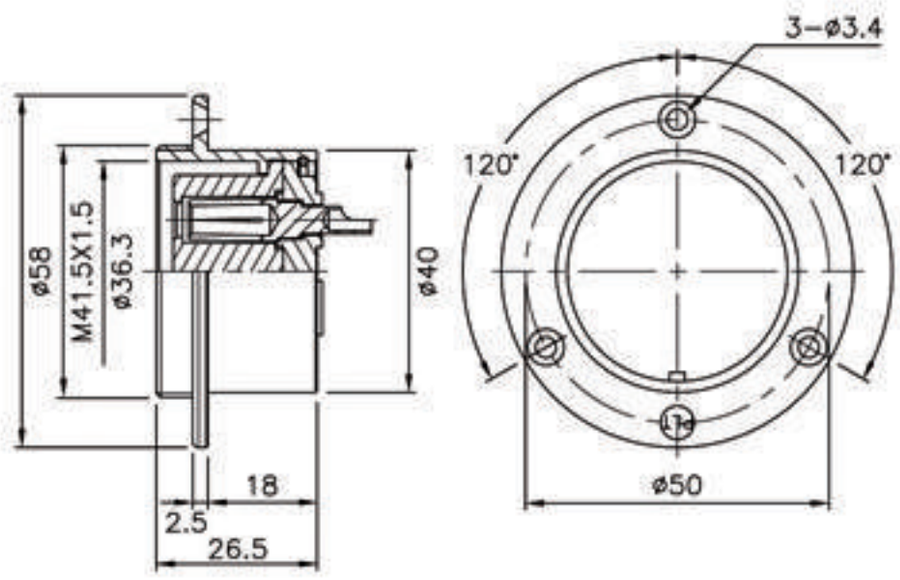

PLT-40❖-RF-R

No. of contacts	4	37				
Contacts Configuration	TÜV	TÜV				
Rated current / voltage	30A 250V	5A 300V				
Operating voltage limit (AC.V.rms)	500	200				
Withstanding voltage (AC.V.rms) 1 minute	2500	1000				
Insulation resistance (MΩ MIN.) at DC 500V	2000	1800				
Contact resistance (mΩ MAX.) at DC 1A	3	3				
Solder inter diameter	4	1.9				

● 以上機種可設計防水型 Above models could be altered to waterproof types IP65 IP67 IP68

Input Type

PLT- 50 Series

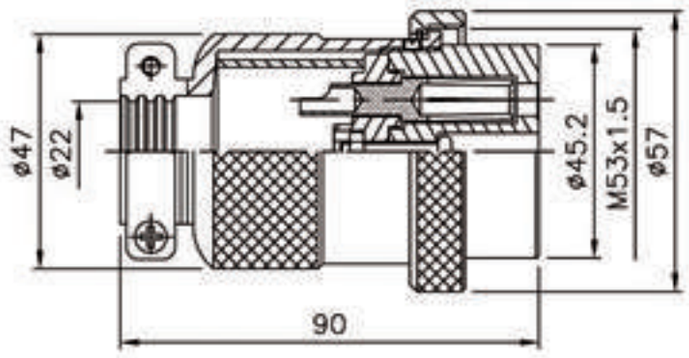

PLT-50❖-P

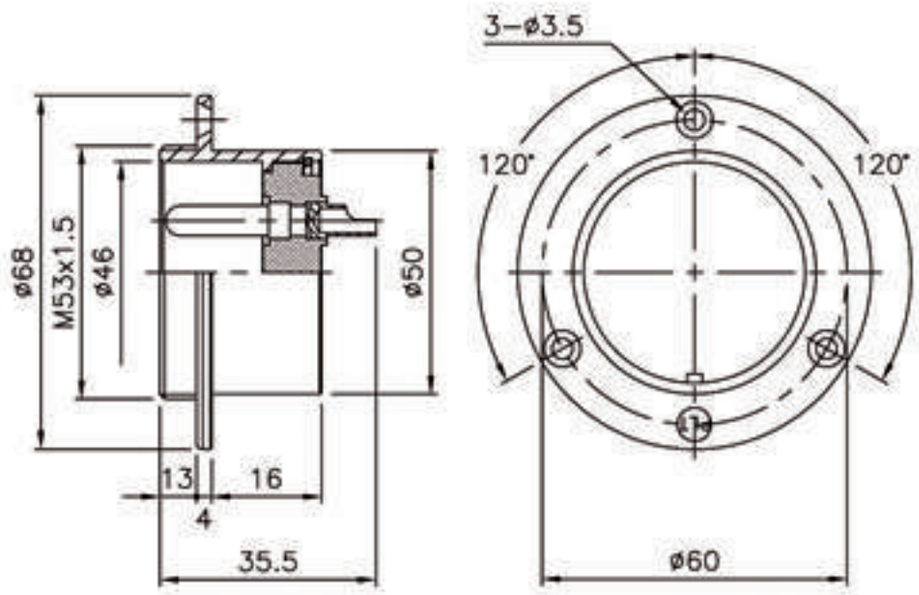

PLT-50❖-R

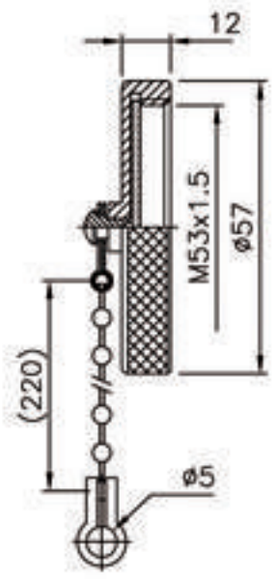

PLT-50-RCa

❖ No. of contacts	4					
Contacts Configuration						
Rated current / voltage	80A 250V					
Operating voltage limit (AC.V.rms)	600					
Withstanding voltage (AC.V.rms) 1 minute	3000					
Insulation resistance (MΩ MIN.) at DC 500V	5000					
Contact resistance (mΩ MAX.) at DC 1A	3					
Solder inter diameter						

● 以上機種可設計防水型 Above models could be altered to waterproof types IP65 IP67 IP68

PLK-16 Series

PLK-30 Series

WGP

防水電氣配管
Liquid-Tight Conduits

GP

防水防爆電氣配管
Explosionproof Liquid-Tight Conduits

CG

耐扭式電纜固定頭
Flex Protective Cable Glands

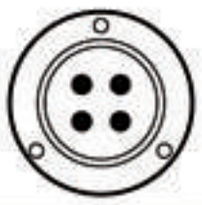

● ORDERING INFORMATION

PLK-162-P-R

- RoHS COMPLIANT 歐盟環保指令
- CONNECTOR TYPE 連接器類型
- NO. OF CONTACTS 導梢數量
- SHELL SIZE(16,30) 外殼尺寸
- NAME OF SERIES 系列名稱

P	Plug	插 頭	AD	Adapter	中 繼
R	Receptacle	插 座	Ca	Cap	保護蓋
F	Female	導 梢	RT	Rubber tube	橡膠管
M	Male	導 針	GP	Conduit type	軟管式
WGP	Nylon type	尼龍管式	CG	Cable glands	迫緊頭
LP	Shape	L型90°	RL	Single thread	單 牙

● MATERAL & FINISH

Kindly instruct material & finish by below types when ordering

Description	Material	Finish
Shell/外殼、本體	・Stainless Steel/不鏽鋼 ・Zinc Die-Casting/鋅合金壓鑄 ・Aluminum alloy/鋁合金壓鑄	・Chrome-plated/鍍鉻 ・Gold-plated/鍍金 ・Nickel-plated/鍍鎳 ・Siliver-plated/鍍銀
Insulator/絕緣體	・Bakelite/電木 ・Delrin/塑鋼 ・Teflon/鐵氟龍	
Contact/接觸體	・Brass/銅 ・Phosphor bronze/磷青銅 ・Berylium copper/鈹銅	・Gold-plated/鍍金 ・Nickel-plated/鍍鎳 ・Siliver-plated/鍍銀

SHELL SIZE

TÜV

Input Type

PLK- 16 Series

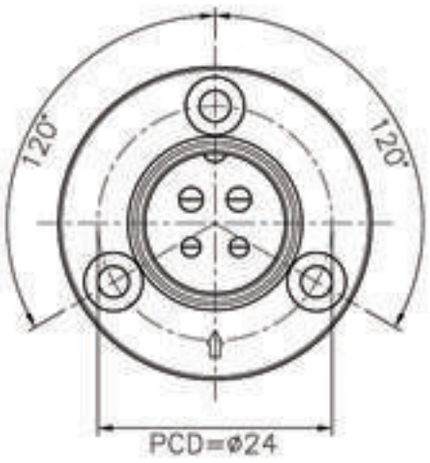

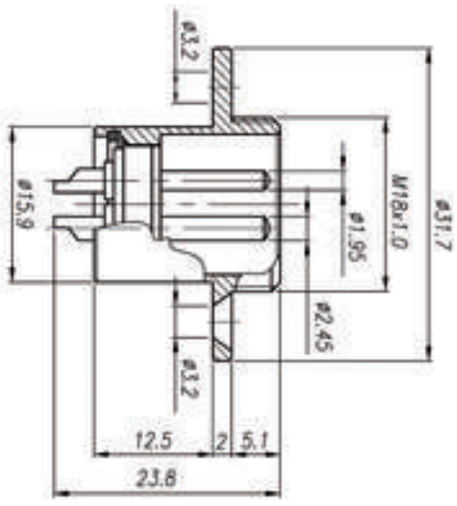

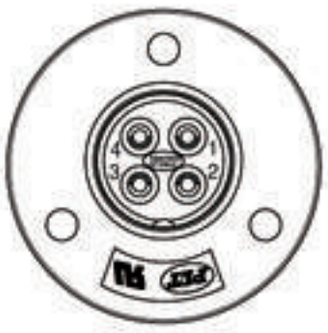

PLK-164-RA-R

另有鎖側螺絲選項
Optional accessory:side screws

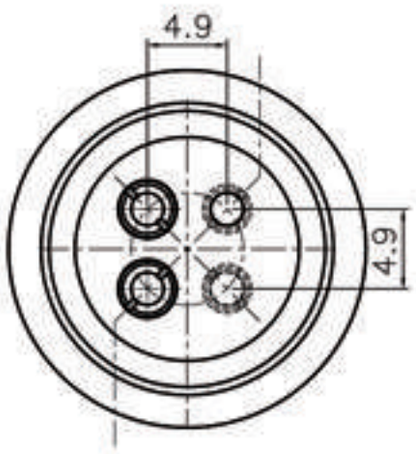

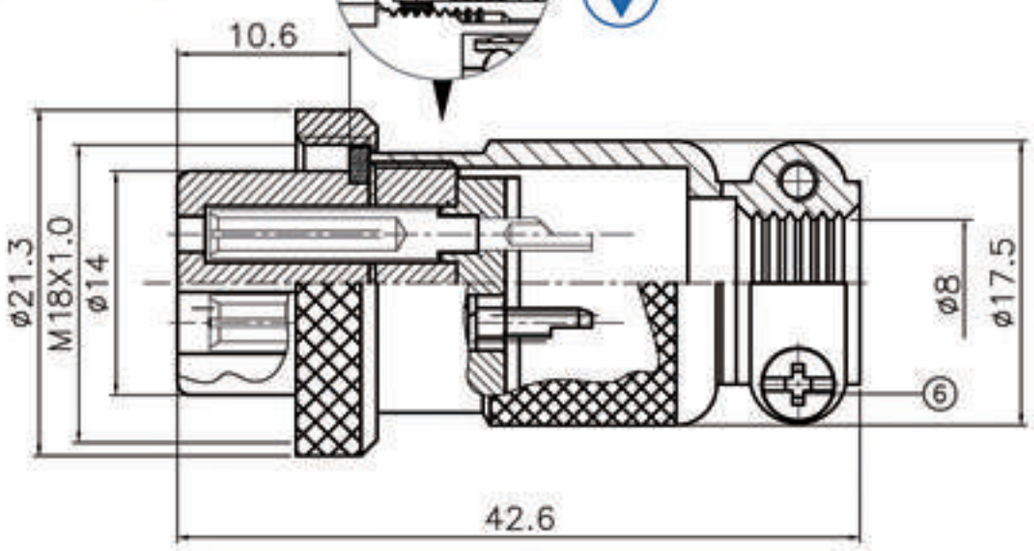

PLK-164-PA-R

No. of contacts	4					
Contacts Configuration	 TÜV					
Rated current / voltage	5A 125V					
Operating voltage limit (AC.V.rms)	200					
Withstanding voltage (AC.V.rms) 1 minute	1000					
Insulation resistance (MΩ MIN.) at DC 500V	1000					
Contact resistance (mΩ MAX.) at DC 1A	3					

● 以上機種可設計防水型 Above models could be altered to waterproof types IP65 IP67 IP68

SHELL SIZE 16

Input Type

TÜV

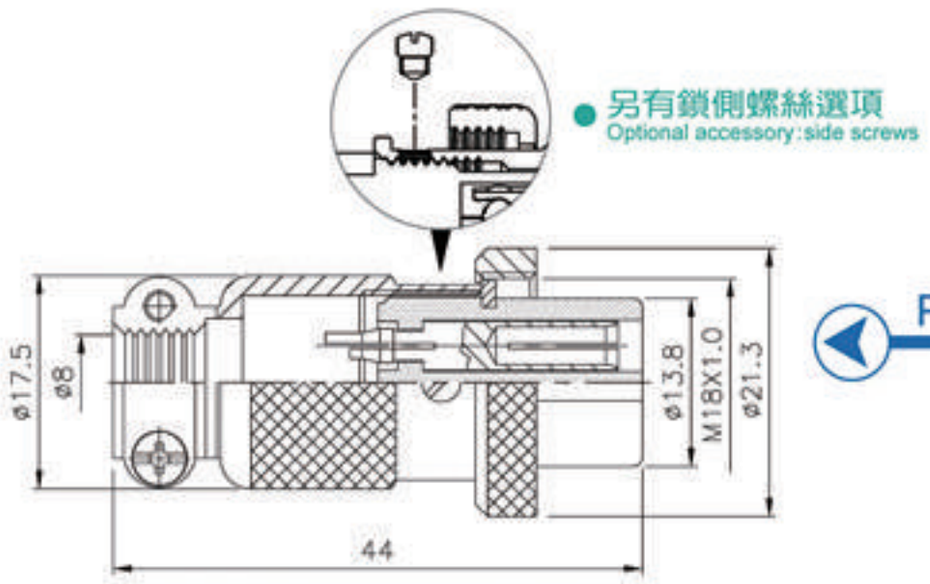

PLK-16❖-P-R

PLK- 16 Series

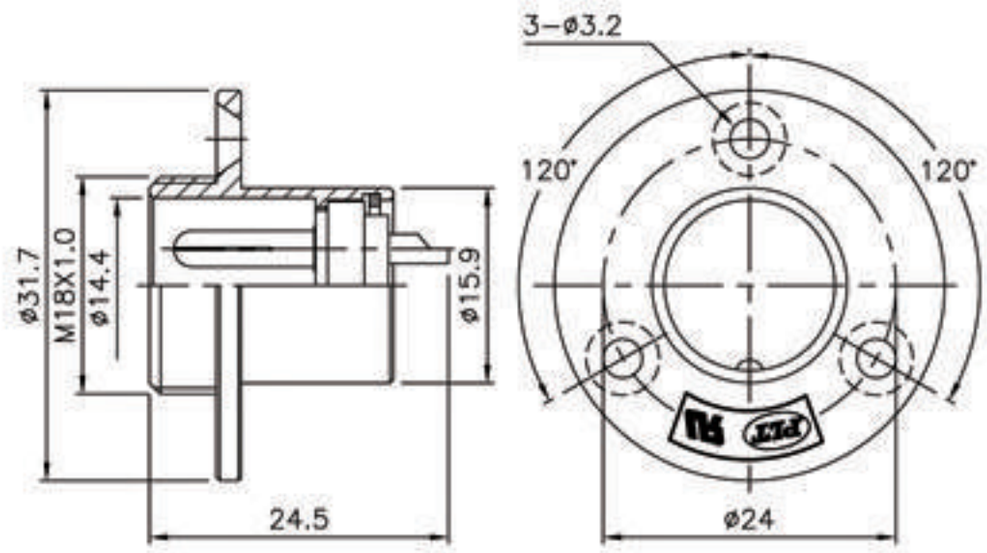

PLK-16❖-R-R

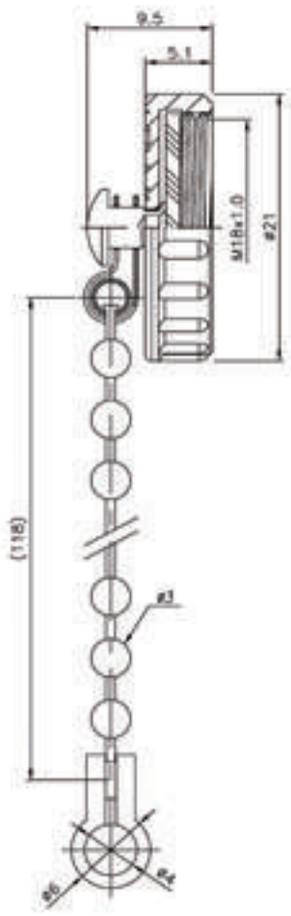

PLK-16C-RCaC-R

Material: Zinc Alloy
材質: 鋅合金

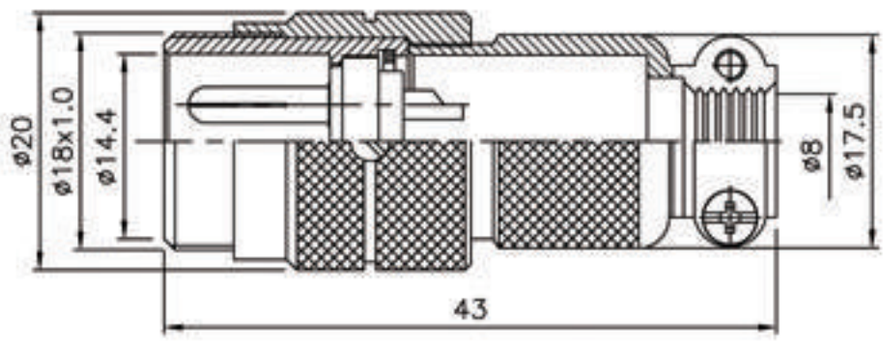

PLK-16❖-AD-R

❖ No. of contacts	2	3	4	5		
Contacts Configuration	TÜV	TÜV	TÜV	TÜV		
Rated current / voltage	5A 125V	5A 125V	5A 125V	5A 125V		
Operating voltage limit (AC.V.rms)	200	200	200	200		
Withstanding voltage (AC.V.rms) 1 minute	1000	1000	1000	1000		
Insulation resistance (MΩ MIN.) at DC 500V	1000	1000	1000	1000		
Contact resistance (mΩ MAX.) at DC 1A	3	3	3	3		
Solder inter diameter	1.5	1.5	1.5	1.3		

PLT SINCE 1978

● 以上機種可設計防水型 Above models could be altered to waterproof types IP65 IP67 IP68

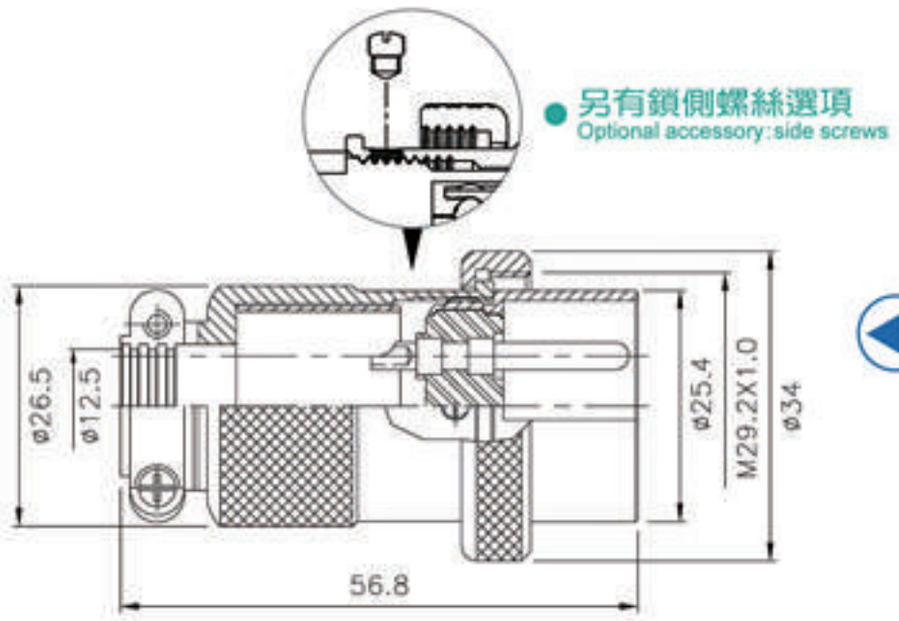

PM

PLK-30❖-PM-R

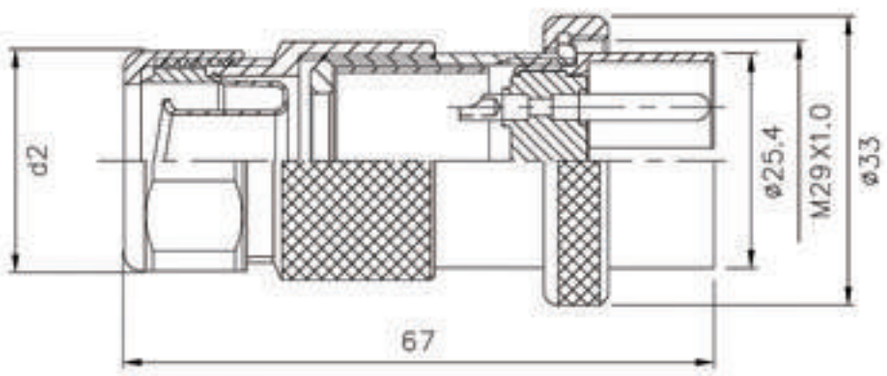

GPM

Conduit

		d1	d2
3	3/8" 軟管	ø10.8	ø26.3
4	1/2" 軟管	ø14.3	ø31.2

PLK-30❖-GPM-R

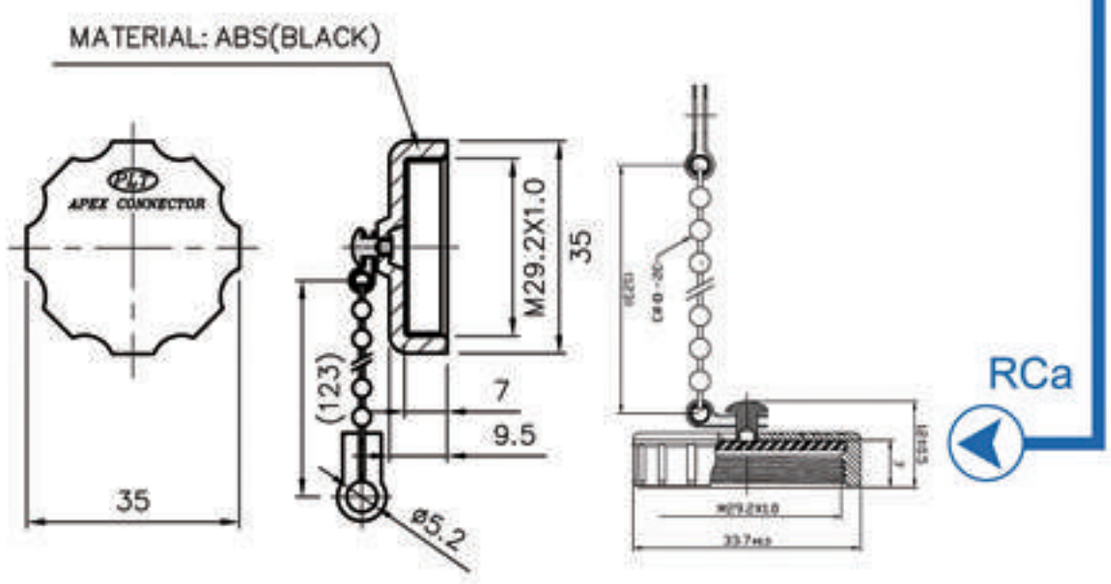

RCa

PLK- 30 Series

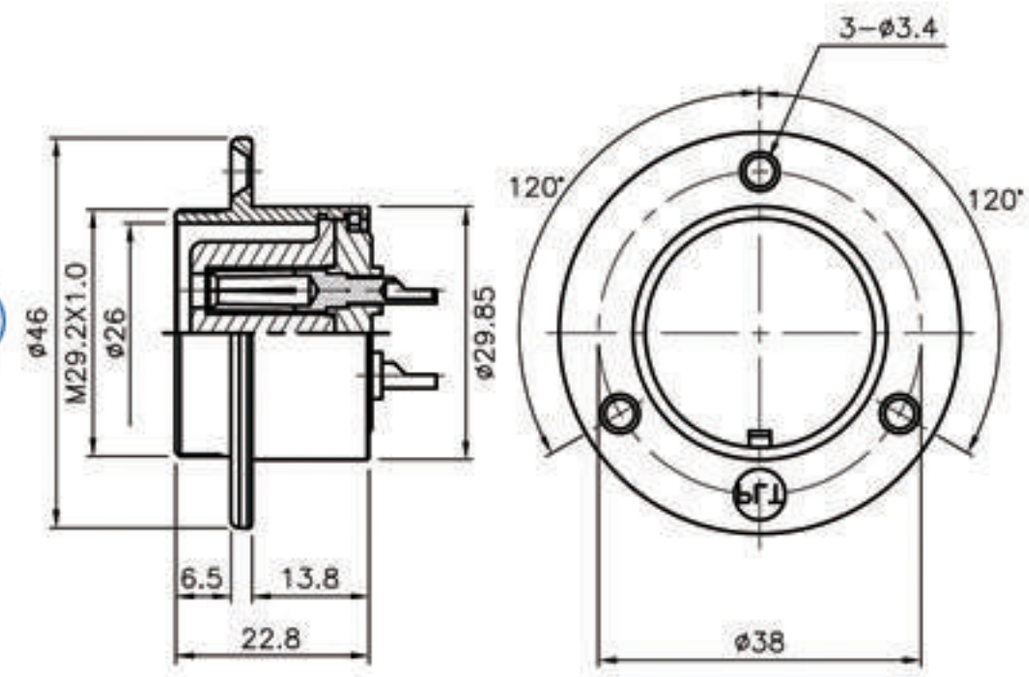

RF

PLK-30❖-RF-R

Material: Plastic
材質: 塑膠

PAT PLT-30A-RCa-R

Material: Zinc Alloy
材質: 鋅合金

PLT-30C-RCa-R

Material: Plastic
材質: 塑膠

PAT A-591PX 本件加值不加價 Value-Added with the Same Price

❖ No. of contacts	4	7				
Contacts Configuration	 TÜV	 TÜV				
Rated current / voltage	15A 250V	15A 250V				
Operating voltage limit (AC.V.rms)	400	400				
Withstanding voltage (AC.V.rms) 1 minute	2000	1800				
Insulation resistance (MΩ MIN.) at DC 500V	2000	2000				
Contact resistance (mΩ MAX.) at DC 1A	3	3				
Solder inter diameter	3.5	3				

● 以上機種可設計防水型 Above models could be altered to waterproof types IP65 IP67 IP68


PLS-20 Series


PLS-24 Series


PLS-27 Series


PLS-28 Series


(Stainless Steel 不鏽鋼)
PLS-28 Series


PLS-35 Series


PLS-41 Series


PLS-4207 Series


WGP
防水電氣配管
Liquid-Tight Conduits


GP
防水防爆電氣配管
Explosionproof Liquid-Tight Conduits


CG
耐扭式電纜固定頭
Flex Protective Cable Glands

● ORDERING INFORMATION

PLS-202-PM X-R

- R: RoHS COMPLIANT 歐盟環保指令
- PM: CONNECTOR TYPE 連接器類型
- 2: NO. OF CONTACTS(2-26) 導梢數量
- 20: SHELL SIZE(20,24,28,35,41,42) 外殼尺寸
- PLS: NAME OF SERIES 系列名稱

P	Plug	插　頭	AD	Adapter	中　繼
R	Receptacle	插　座	Ca	Cap	保護蓋
F	Female	導　梢	RT	Rubber tube	橡膠管
M	Male	導　針	GP	Conduit type	軟管式
WGP	Nylon type	尼龍管式	CG	Cable glands	迫緊頭
LP	Shape	L型90°	RL	Single thread	單　牙

● MATERAL & FINISH

Kindly instruct material & finish by below types when ordering

Description	Material	Finish
Shell/外殼、本體	・Stainless Steel/不鏽鋼 ・Zinc Die-Casting/鋅合金壓鑄 ・Aluminum alloy/鋁合金壓鑄	・Chrome-plated/鍍鉻 ・Gold-plated/鍍金 ・Nickel-plated/鍍鎳 ・Siliver-plated/鍍銀
Insulator/絕緣體	・Bakelite/電木 ・Delrin/塑鋼 ・Teflon/鐵氟龍	
Contact/接觸體	・Brass/銅 ・Phosphor bronze/磷青銅 ・Berylium copper/鈹銅	・Gold-plated/鍍金 ・Nickel-plated/鍍鎳 ・Siliver-plated/鍍銀

SHELL SIZE 20

Input Type

TÜV

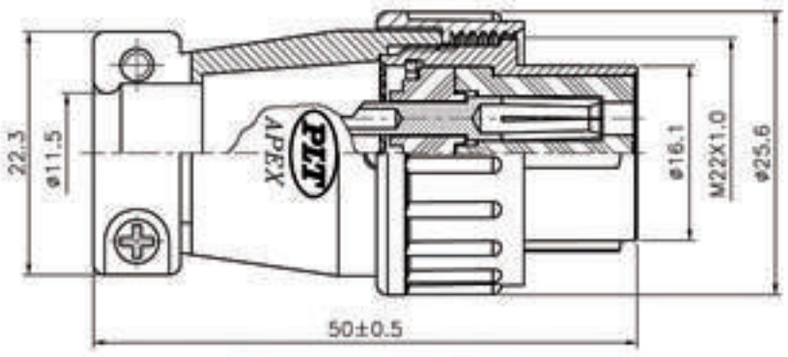

PF

PLS-20❖-PF X-R

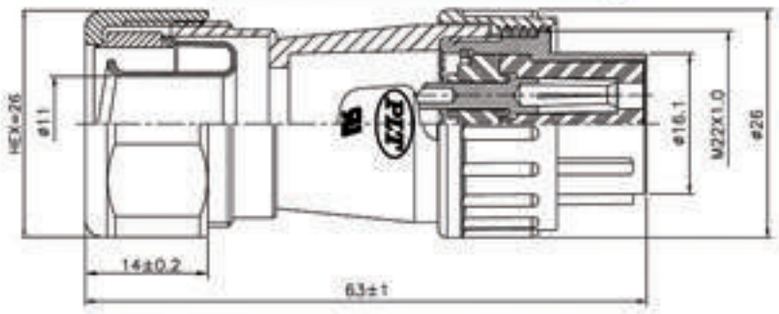

GPF

PLS-20❖-GPF3 X-R 3=轉接3/8”軟管

Connected with 3/8”conduit

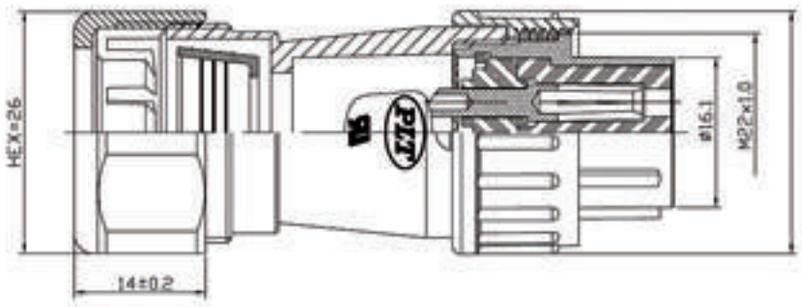

WGPF

PLS-20❖-WGPF3 X-R 3=轉接3/8”尼龍管

Connected with 3/8”nylon tube

Material: Zinc Alloy
材質: 鋅合金

PLS-20C-RCaC-R

RCaC

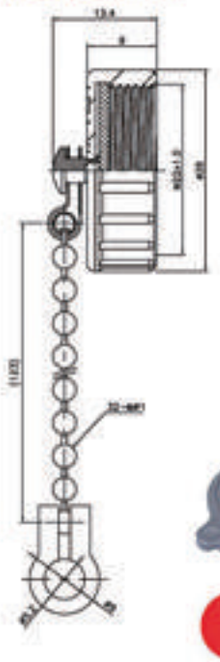

ACCESSORY:

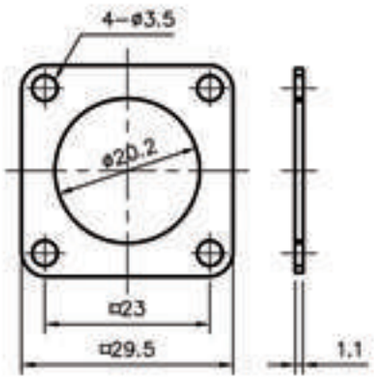

RUBBER GASKET FOR PLS-20❖-RM

Material: Plastic
材質: 塑膠

PAT A-587PX

本件加值不加價
Value-Added with the Same Price

PLS- 20 Series

RM

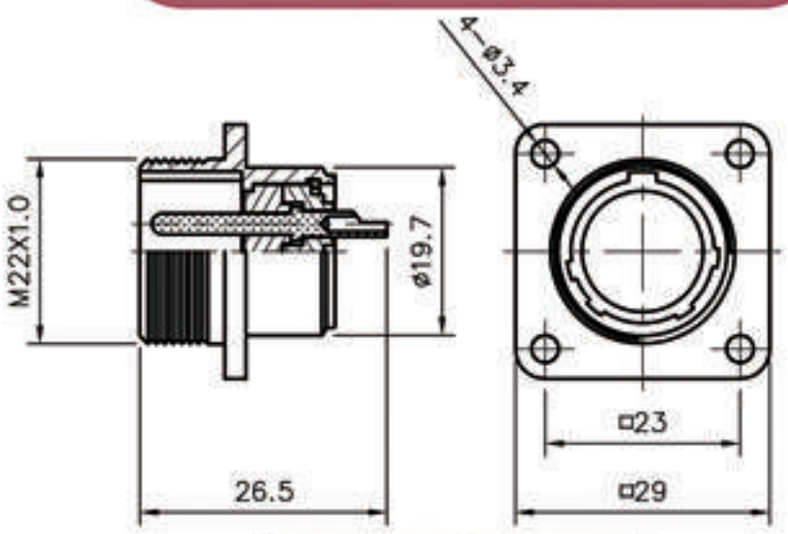

PLS-20❖-RM-R

ADM

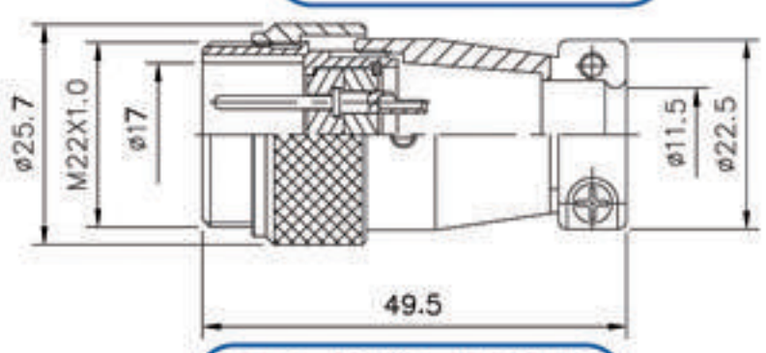

PLS-20❖-ADM-R

ADGM

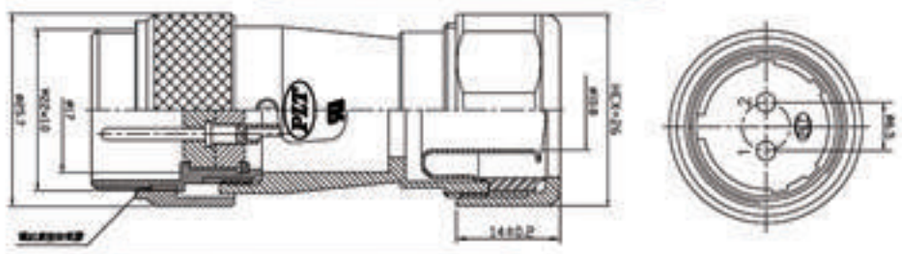

PLS-20❖-ADGM-R

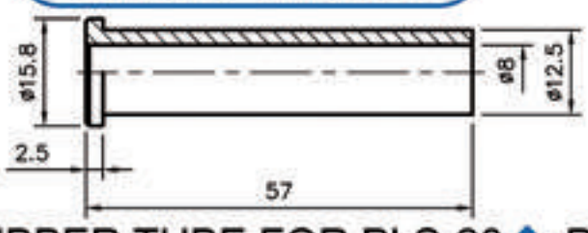

RUBBER TUBE FOR PLS-20❖-PF

❖ No. of contacts	2	3	4	7		
Contacts Configuration	TÜV	TÜV	TÜV	TÜV		
Rated current / voltage	15A 250V	15A 250V	10A 250V	10A 250V		
Operating voltage limit (AC.V.rms)	250	250	250	250		
Withstanding voltage (AC.V.rms) 1 minute	1500	1500	1000	1000		
Insulation resistance (MΩ MIN.) at DC 500V	2000	2000	2000	2000		
Contact resistance (mΩ MAX.) at DC 1A	3	3	3	3		
Solder inter diameter	1.8	1.8	1.6	1.6		

PLT SINCE 1978

● 以上機種可設計防水型 Above models could be altered to waterproof types IP65 IP67 IP68

SHELL SIZE

TÜV

Output Type

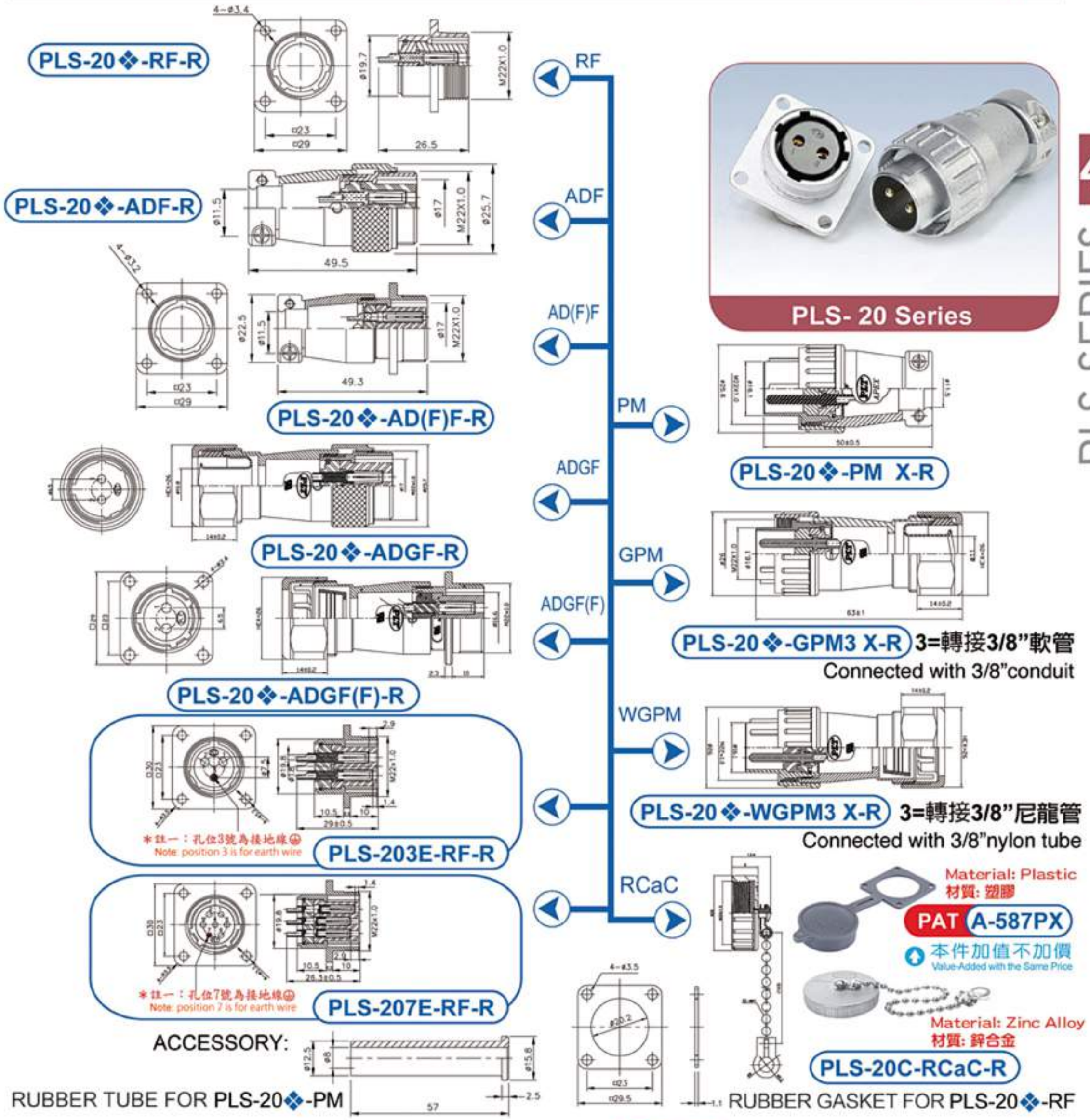

❖ No. of contacts	2	3	4	5	7	12
Contacts Configuration	TÜV	TÜV	TÜV		TÜV	
Rated current / voltage	15A 250V	15A 250V	10A 250V	10A 250V	10A 250V	5A 250V
Operating voltage limit (AC.V.rms)	250	250	250	250	250	250
Withstanding voltage (AC.V.rms) 1 minute	1500	1500	1500	1500	1000	1000
Insulation resistance (MΩ MIN.) at DC 500V	2000	2000	2000	2000	2000	1000
Contact resistance (mΩ MAX.) at DC 1A	3	3	3	3	3	5
Solder inter diameter	1.8	1.8	1.6	1.6	1.6	1.2

● 以上機種可設計防水型 Above models could be altered to waterproof types IP65 IP67 IP68

SHELL SIZE 24

Input Type

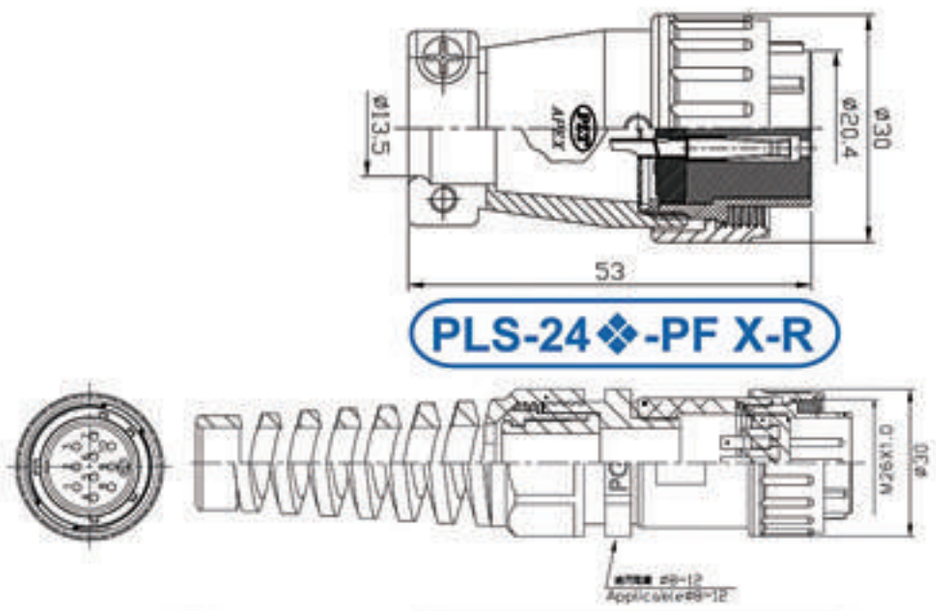

PLS-24❖-PF X-R

PLS- 24 Series

IP67 PLS-24❖-PFCG X-R

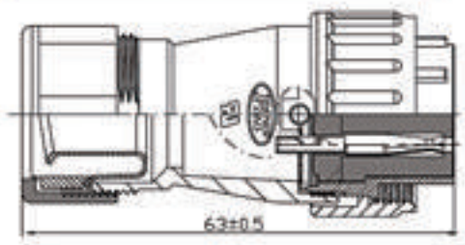

PLS-24❖-GPF3 X-R 3=轉接3/8"軟管
Connected with 3/8"conduit

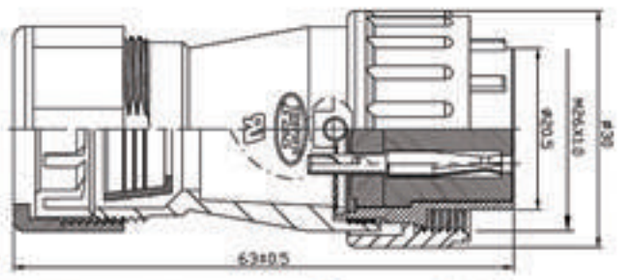

PLS-24❖-WGPF3 X-R 3=轉接3/8"尼龍管
Connected with 3/8"nylon tube

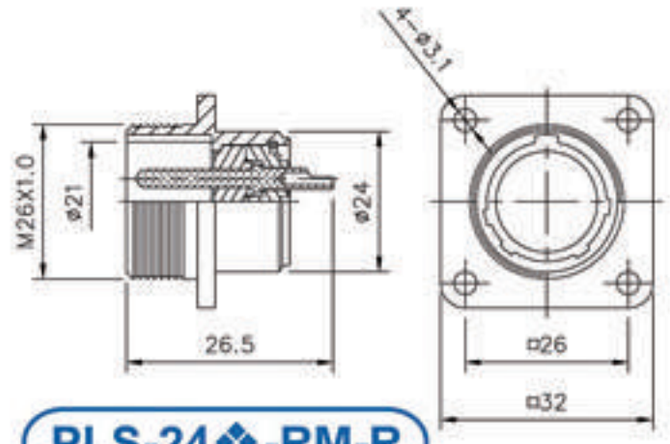

PLS-24❖-RM-R

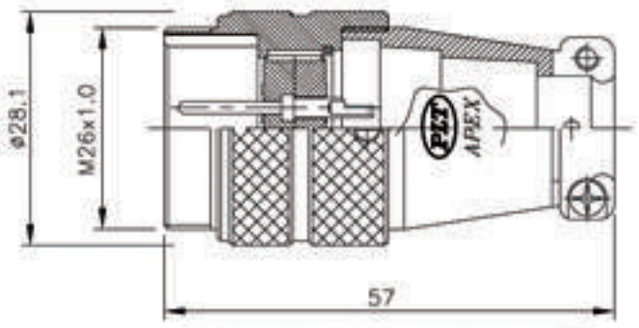

PLS-24❖-ADM-R

Material: Zinc Alloy
材質: 鋅合金

PLS-24C-RCaC-R

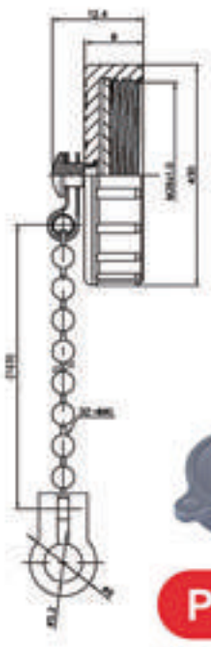

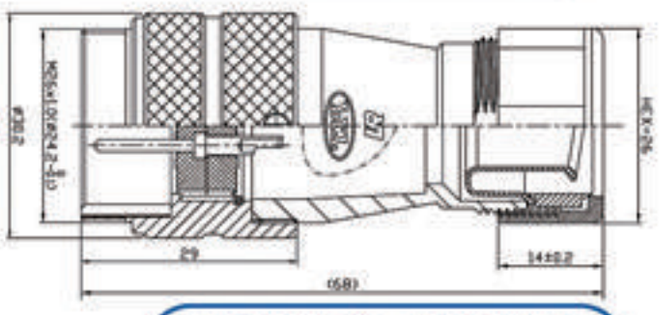

PLS-24❖-ADGM-R

ACCESSORY:

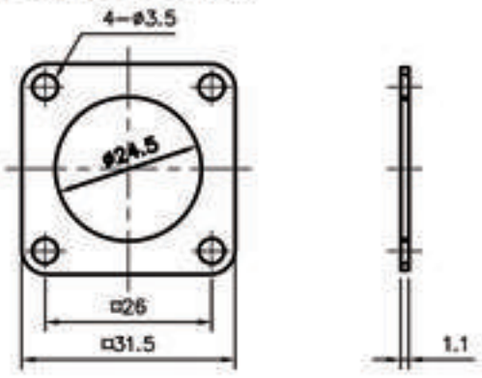

RUBBER GASKET FOR PLS-24❖-RM

Material: Plastic
材質: 塑膠

PAT A-588PX
本件加值不加價
Value-Added with the Same Price

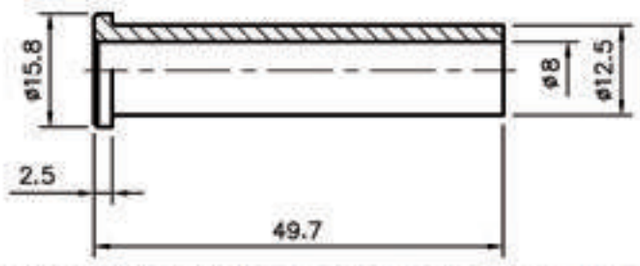

RUBBER TUBE FOR PLS-24❖-PF

❖ No. of contacts	5	10				
Contacts Configuration	TÜV	TÜV				
Rated current / voltage	15A 250V	10A 250V				
Operating voltage limit (AC.V.rms)	400	250				
Withstanding voltage (AC.V.rms) 1 minute	1800	1000				
Insulation resistance (MΩ MIN.) at DC 500V	2000	2000				
Contact resistance (mΩ MAX.) at DC 1A	3	3				
Solder inter diameter	2.8	1.6				

PLT SINCE 1978

● 以上機種可設計防水型 Above models could be altered to waterproof types IP65 IP67 IP68

Output Type

PLS- 24 Series

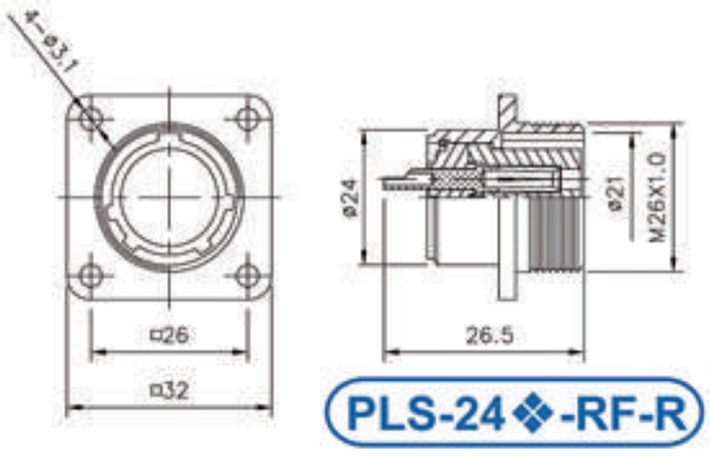

PLS-24❖-RF-R

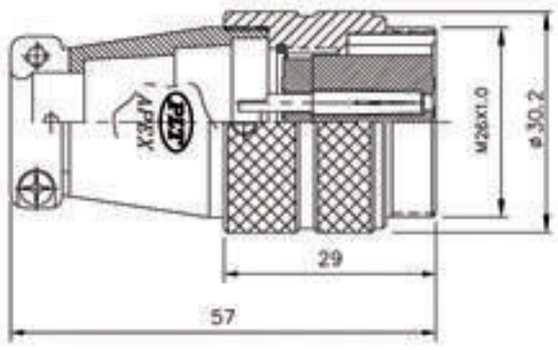

PLS-24❖-ADF-R

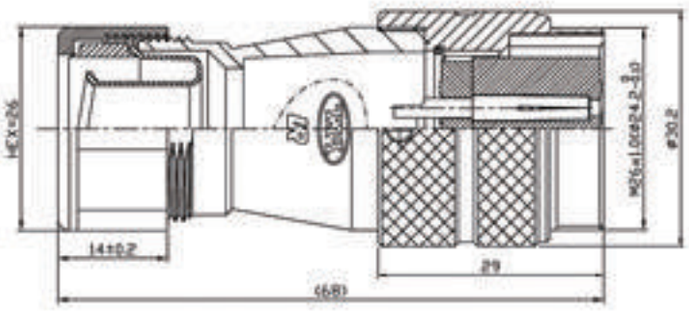

PLS-24❖-ADGF-R

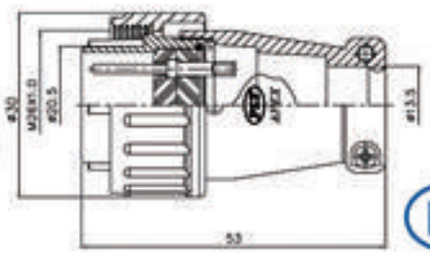

PLS-24❖-PM X-R

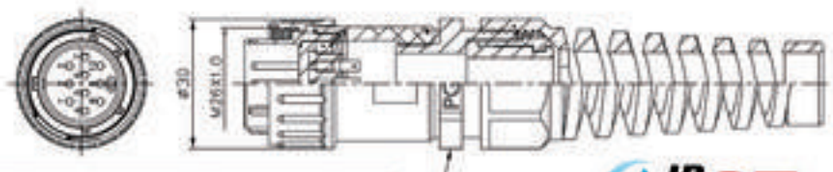

PLS-24❖-PMCG X-R

IP67

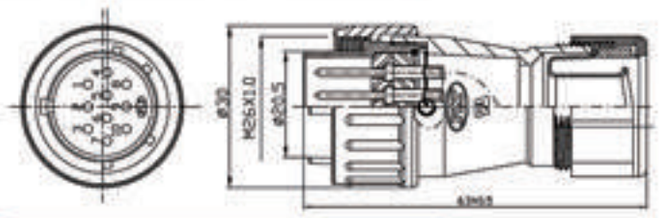

PLS-24❖-GPM3 X-R 3=轉接3/8"軟管

Connected with 3/8"conduit

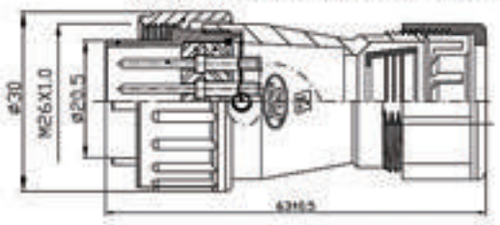

PLS-24❖-WGPM3 X-R

3=轉接3/8"尼龍管

Connected with 3/8"nylon tube

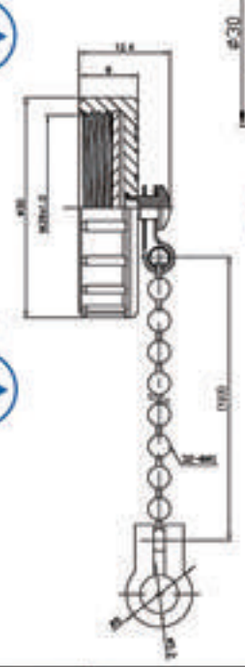

Material: Zinc Alloy
材質: 鋅合金

PLS-24C-RCaC-R

ACCESSORY:

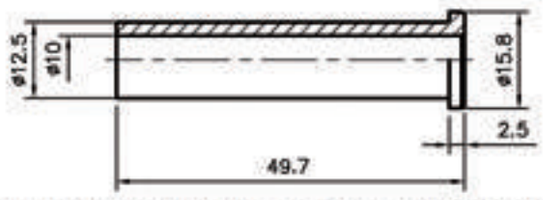

RUBBER TUBE FOR PLS-24❖-PM

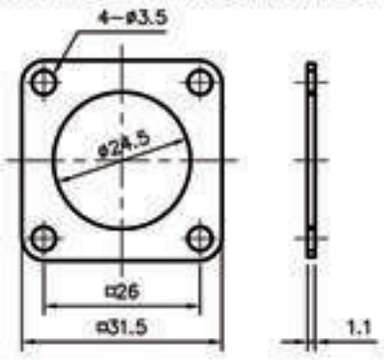

RUBBER GASKET FOR PLS-24❖-RF

Material: Plastic
材質: 塑膠

PAT A-588PX

本件加值不加價
Value-Added with the Same Price

No. of contacts	5	10				
Contacts Configuration	 TÜV	 TÜV				
Rated current / voltage	15A 250V	10A 250V				
Operating voltage limit (AC.V.rms)	400	250				
Withstanding voltage (AC.V.rms) 1 minute	1800	1000				
Insulation resistance (MΩ MIN.) at DC 500V	2000	2000				
Contact resistance (mΩ MAX.) at DC 1A	3	3				
Solder inter diameter	2.8	1.6				

● 以上機種可設計防水型 Above models could be altered to waterproof types IP65 IP67 IP68

SHELL SIZE 27

Output Type

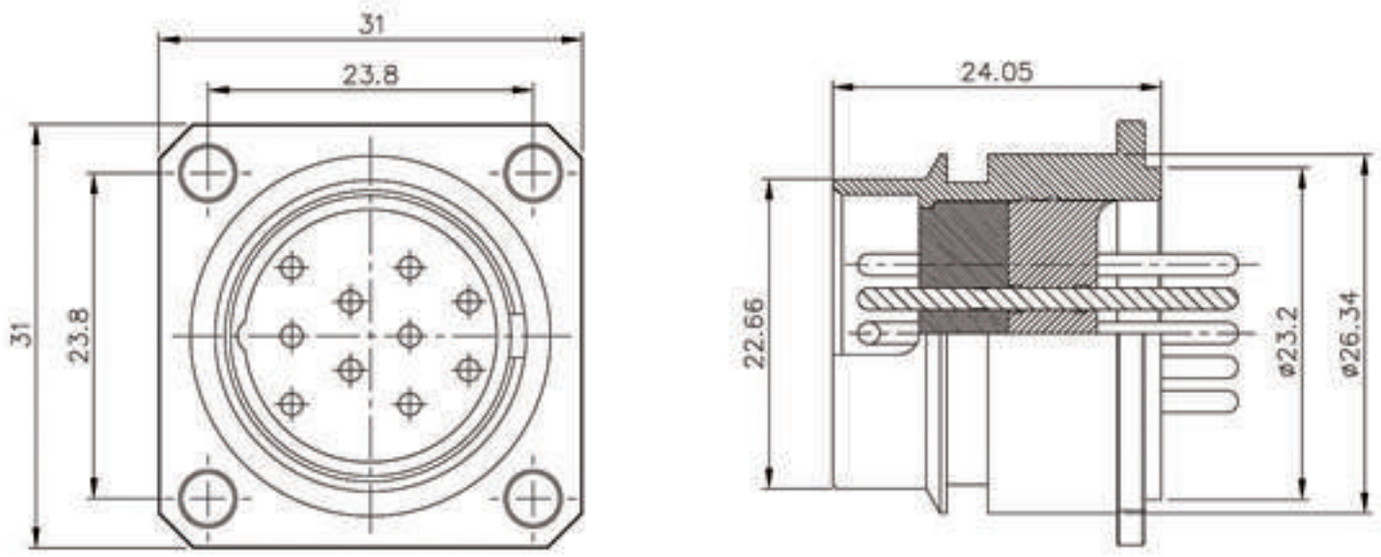

PLS-2710-RM

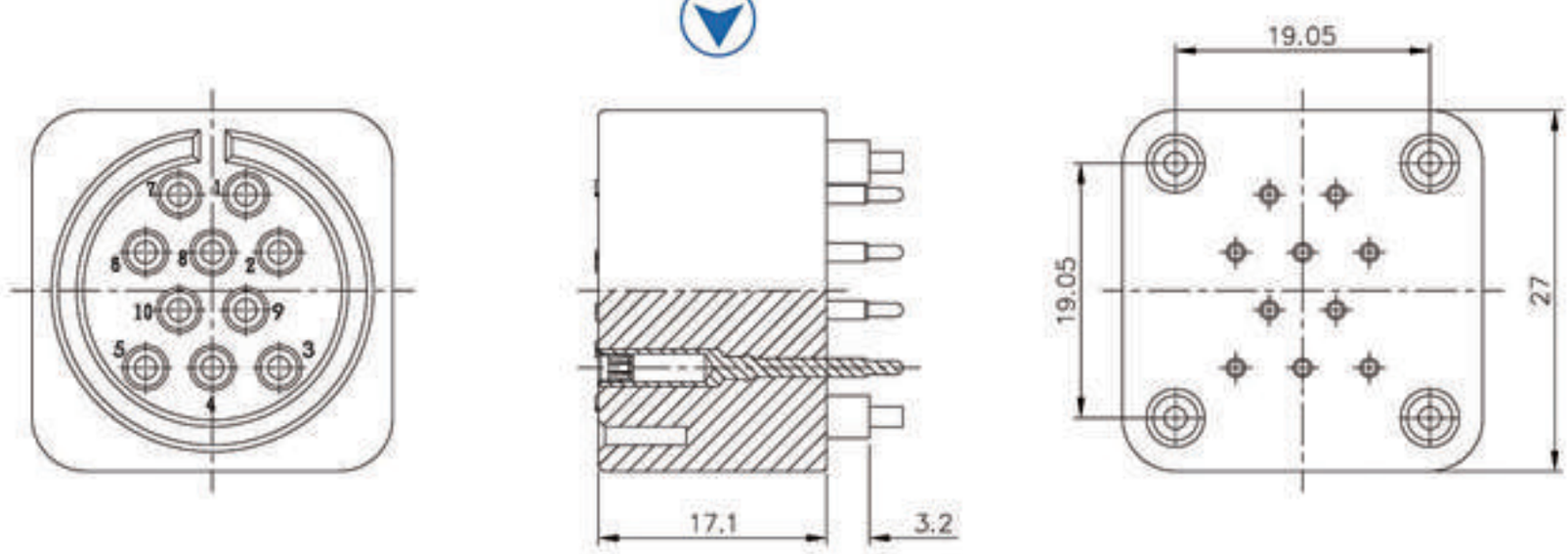

PLS-2710-PF

No. of contacts	10					
Contacts Configuration						
Rated current / voltage	5A 250V					
Operating voltage limit (AC.V.rms)	250					
Withstanding voltage (AC.V.rms) 1 minute	1000					
Insulation resistance (MΩ MIN.) at DC 500V	1000					
Contact resistance (mΩ MAX.) at DC 1A	5					
Solder inter diameter						

PLT SINCE 1978

● 以上機種可設計防水型 Above models could be altered to waterproof types IP65 IP67 IP68

PLS- 28 Series

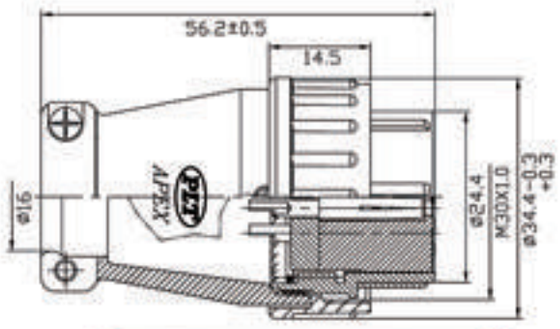

PLS-28❖-PF X-R

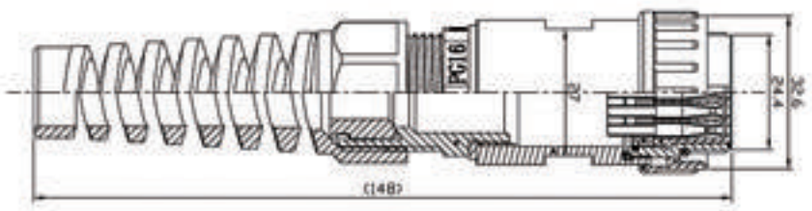

IP67 PLS-28❖-PFCG-R

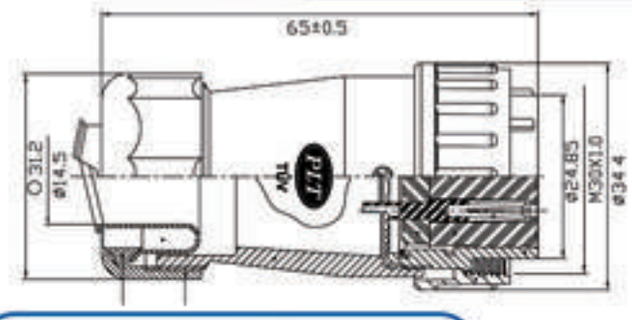

PLS-28❖-GPF4 X-R 4=轉接1/2"軟管

Connected with 1/2"conduit

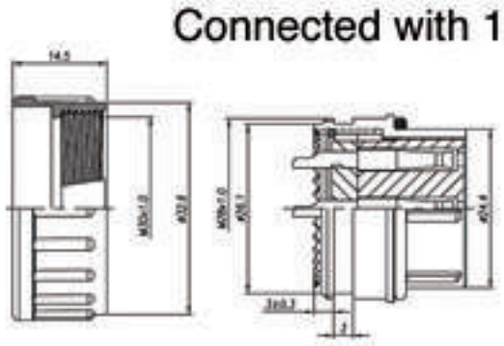

PLS-28❖-PFB X-R

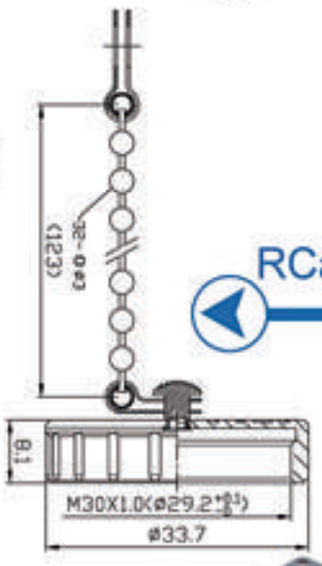

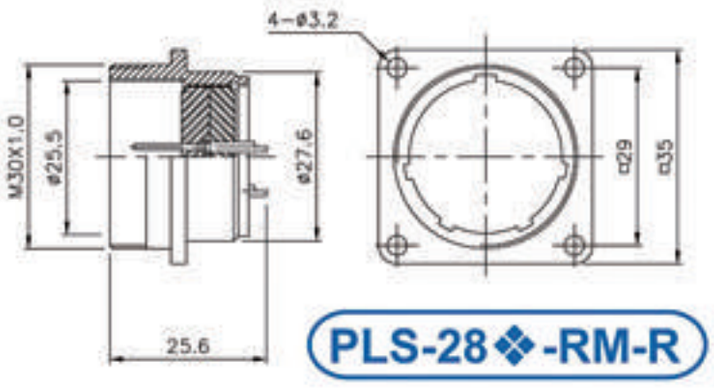

PLS-28❖-RM-R

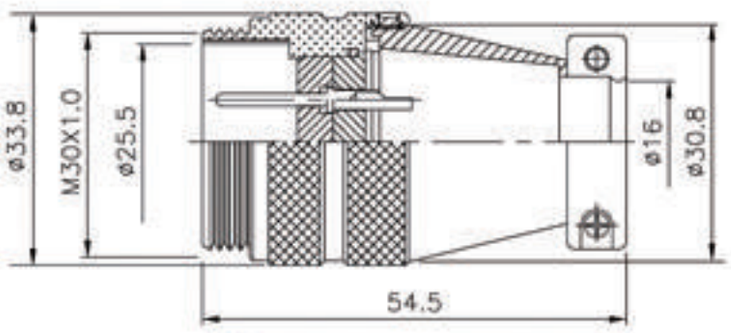

PLS-28❖-ADM-R

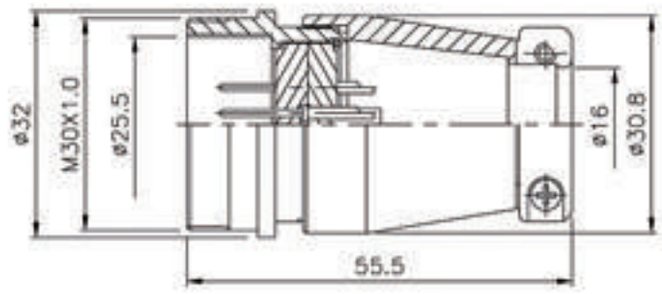

PLS-28❖-AD(F)M-R

ACCESSORY:

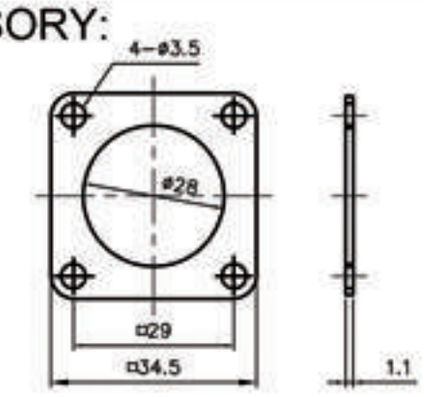

RUBBER GASKET FOR PLS-28❖-RM

Material: Zinc Alloy
材質: 鋅合金

PLS-28C-RCa-R

Material: Plastic
材質: 塑膠

PAT A-589PX

本件加值不加價
Value-Added with the Same Price

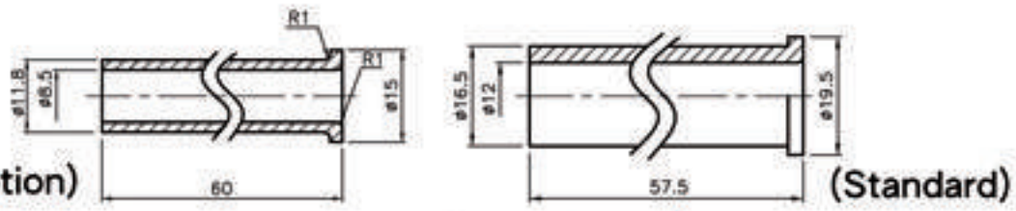

(Option) (Standard)

RUBBER TUBE FOR PLS-28❖-PF

No. of contacts	3	4	7	12	16	17	20	26
Contacts Configuration	TÜV UL	TÜV UL	TÜV UL	TÜV UL	TÜV UL	TÜV UL	TÜV UL	TÜV UL
Rated current / voltage	15A 250V	15A 250V	15A 250V	10A 250V	10A 250V	10A 250V	5A 250V	5A 250V
Operating voltage limit (AC.V.rms)	400	400	400	250	250	250	250	250
Withstanding voltage (AC.V.rms) 1 minute	2000	2000	1800	1000	1000	1000	1000	1000
Insulation resistance (MΩ MIN.) at DC 500V	2000	2000	2000	1000	1000	1000	1000	1000
Contact resistance (mΩ MAX.) at DC 1A	3	3	3	5	5	5	3	3
Solder inter diameter	3.4	3.4	2.4	1.6	1.6	1.6	1.2	1.2

SHELL SIZE 28

Output Type

TÜV

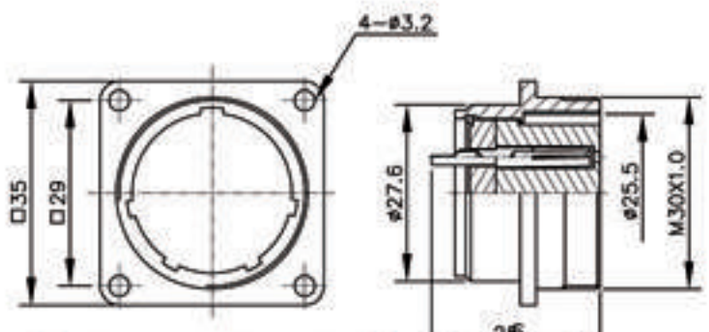

PLS-28❖-RF-R

PLS- 28 Series

RF

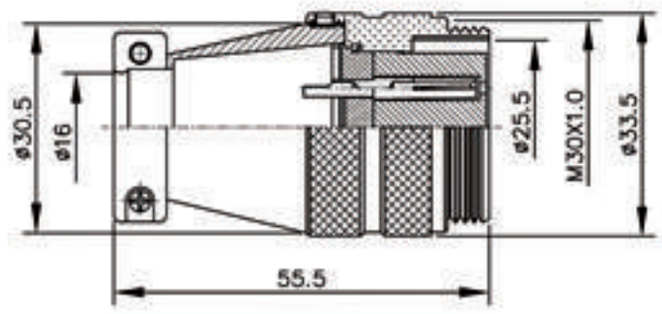

PLS-28❖-ADF-R

ADF

PMCG

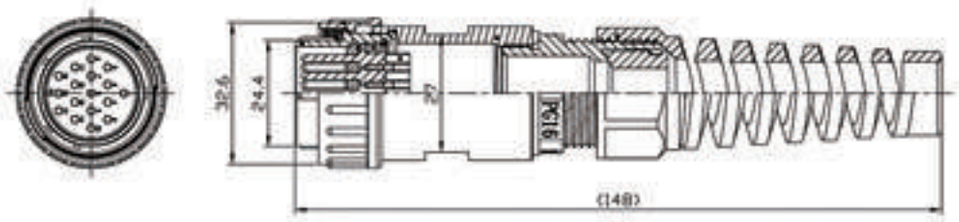

IP67 PLS-28❖-PMCG-R

PM

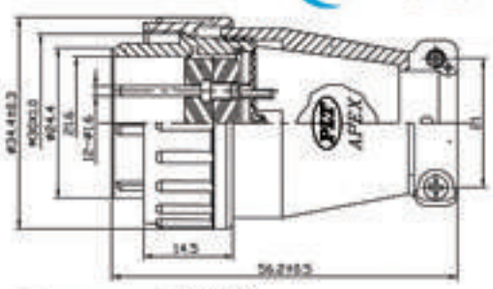

PLS-28❖-PM X-R

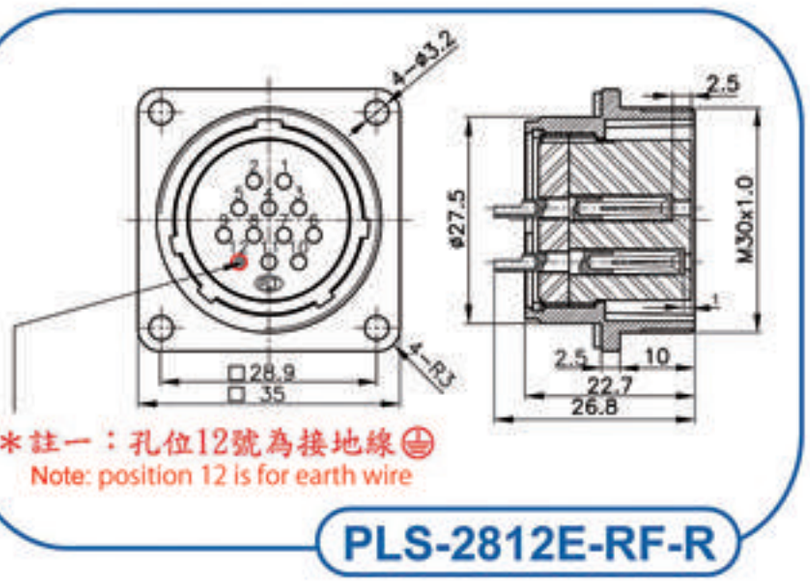

*註一：孔位12號為接地線⏚
Note: position 12 is for earth wire

PLS-2812E-RF-R

GPM

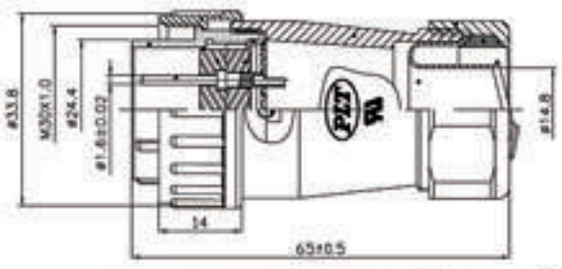

PLS-28❖-GPM4 X-R

4=轉接1/2"軟管
Connected with 1/2"conduit

PMA

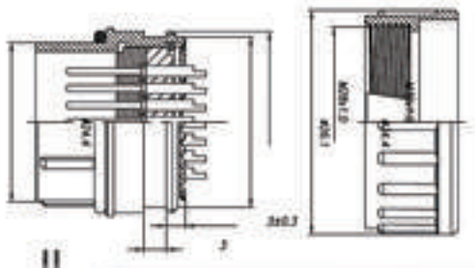

PLS-28❖-PMA XB-R

RCa

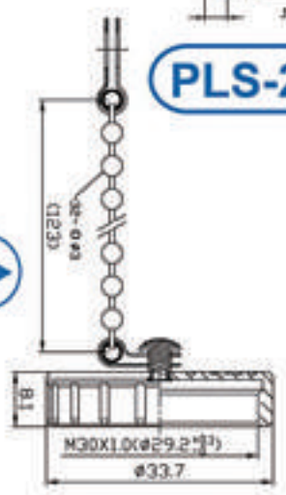

PLS-28C-RCa-R

Material: Zinc Alloy
材質: 鋅合金

ACCESSORY:

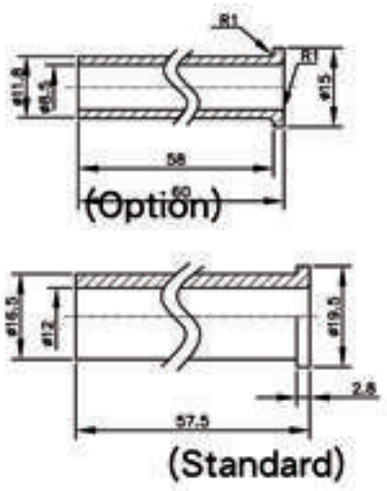

RUBBER TUBE FOR PLS-28❖-PM

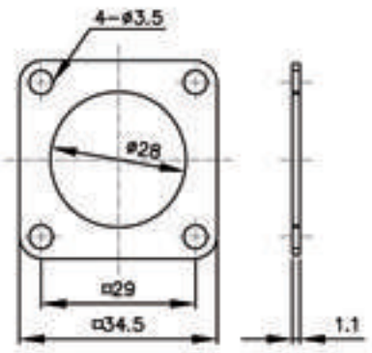

RUBBER GASKET FOR PLS-28❖-RF

Material: Plastic
材質: 塑膠

PAT A-589PX

本件加值不加價
Value-Added with the Same Price

❖ No. of contacts	3	4	7	12	16	17	20	26
Contacts Configuration	 TÜV UL	 TÜV UL	 TÜV UL	 TÜV UL	 TÜV UL	 TÜV UL	 TÜV UL	 TÜV UL
Rated current / voltage	15A 250V	15A 250V	15A 250V	10A 250V	10A 250V	10A 250V	5A 250V	5A 250V
Operating voltage limit (AC.V.rms)	400	400	400	250	250	250	250	250
Withstanding voltage (AC.V.rms) 1 minute	2000	2000	1800	1000	1000	1000	1000	1000
Insulation resistance (MΩ MIN.) at DC 500V	2000	2000	2000	1000	1000	1000	1000	1000
Contact resistance (mΩ MAX.) at DC 1A	3	3	3	5	5	5	3	3
Solder inter diameter	3.4	3.4	2.4	1.6	1.6	1.6	1.2	1.2

PLT SINCE 1978

● 以上機種可設計防水型 Above models could be altered to waterproof types IP65 IP67 IP68

PLS- 28 Series

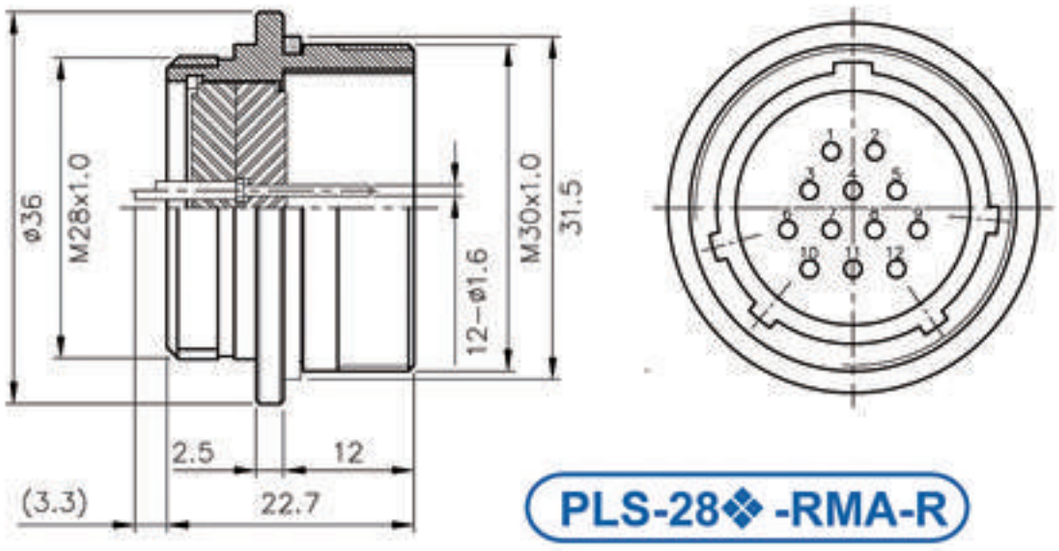

PLS-28❖ -RMA-R

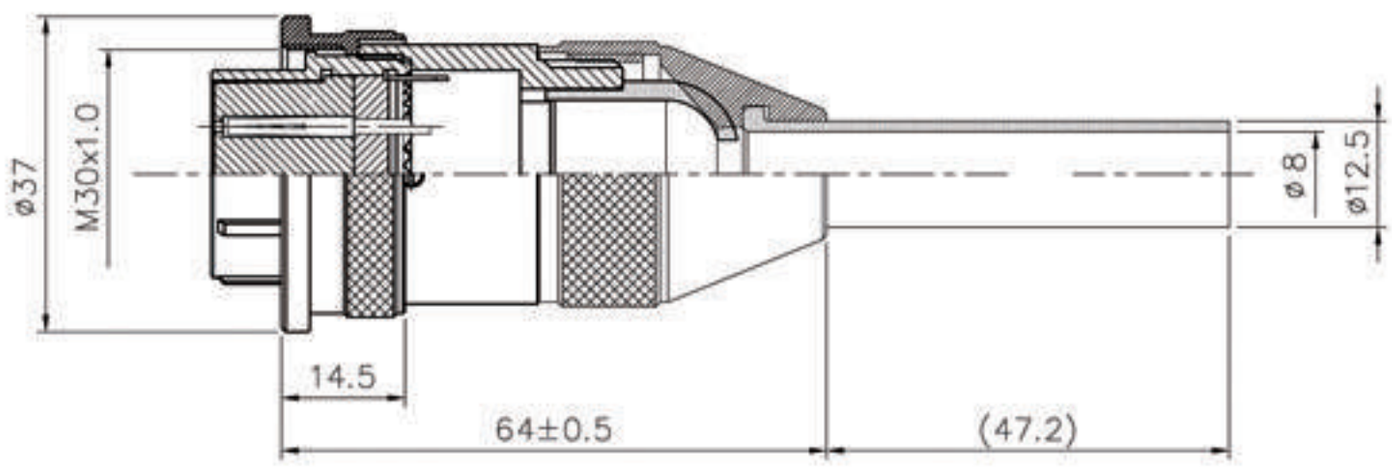

PLS-28❖ -PFA-R

(Stainless Steel 不鏽鋼)

❖ No. of contacts	3	4	7	12	16	17	20	26
Contacts Configuration	 TÜV UL	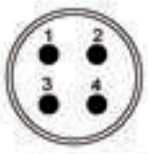 TÜV UL	 TÜV UL	 TÜV UL	 TÜV UL	 TÜV UL	 TÜV UL	 TÜV UL
Rated current / voltage	15A 250V	15A 250V	15A 250V	10A 250V	10A 250V	10A 250V	5A 250V	5A 250V
Operating voltage limit (AC.V.rms)	400	400	400	250	250	250	250	250
Withstanding voltage (AC.V.rms) 1 minute	2000	2000	1800	1000	1000	1000	1000	1000
Insulation resistance (MΩ MIN.) at DC 500V	2000	2000	2000	1000	1000	1000	1000	1000
Contact resistance (mΩ MAX.) at DC 1A	3	3	3	5	5	5	3	3
Solder inter diameter	3.4	3.4	2.4	1.6	1.6	1.6	1.2	1.2

● 以上機種可設計防水型 Above models could be altered to waterproof types IP65 IP67 IP68

SHELL SIZE 35

Input Type

TÜV

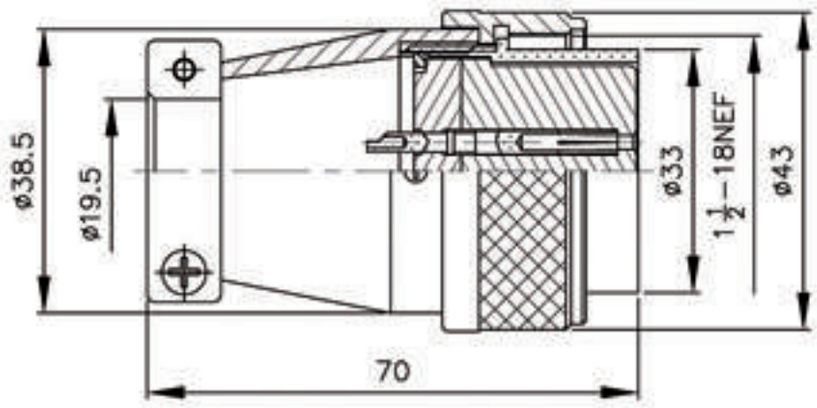

PLS-35❖-PF-R

PLS-35 Series

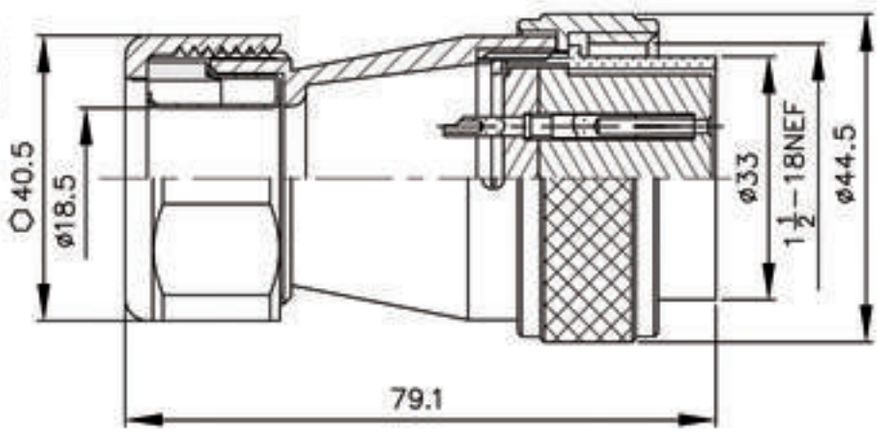

PLS-35❖-GPF6-R 6=轉接3/4"軟管
Connected with 3/4"conduit

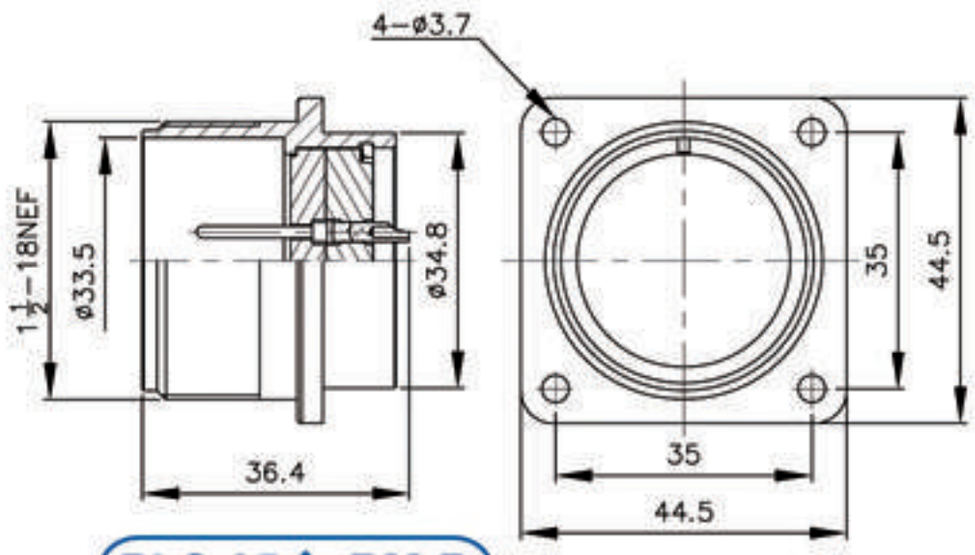

PLS-35❖-RM-R

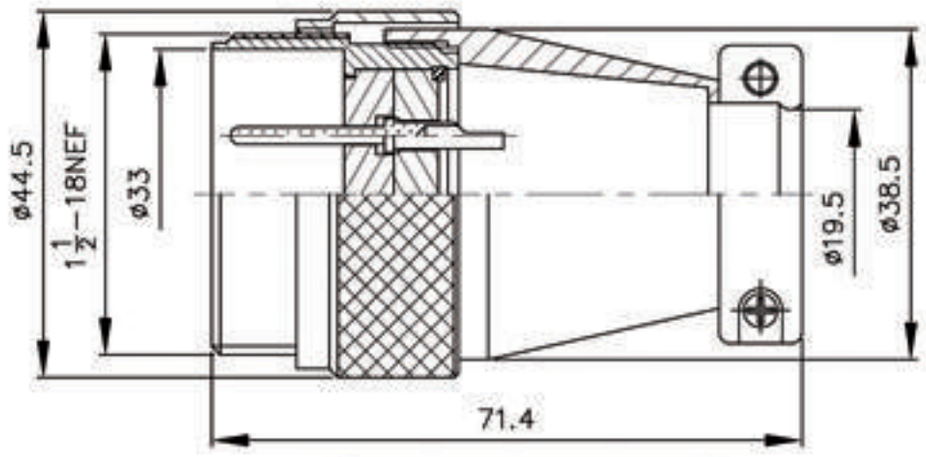

PLS-35❖-ADM-R

Material: Aluminum Alloy
材質: 鋁合金

AMS25043-24A

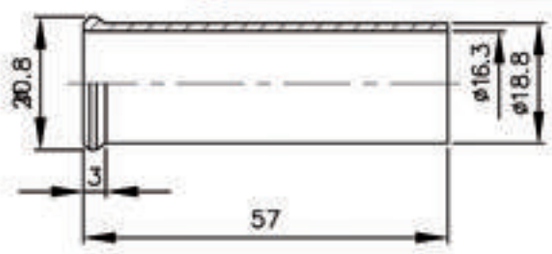

RUBBER TUBE :
ACCESSORY FOR PLS-35❖-P

❖ No. of contacts	24						
Contacts Configuration	TÜV						
Rated current / voltage	8A 250V						
Operating voltage limit (AC.V.rms)	200						
Withstanding voltage (AC.V.rms) 1 minute	1000						
Insulation resistance (MΩ MIN.) at DC 500V	1000						
Contact resistance (mΩ MAX.) at DC 1A	3						
Solder inter diameter	1.8						

PLT SINCE 1978

● 以上機種可設計防水型 Above models could be altered to waterproof types IP65 IP67 IP68

SHELL SIZE

TÜV

Output Type

PLS-35 Series

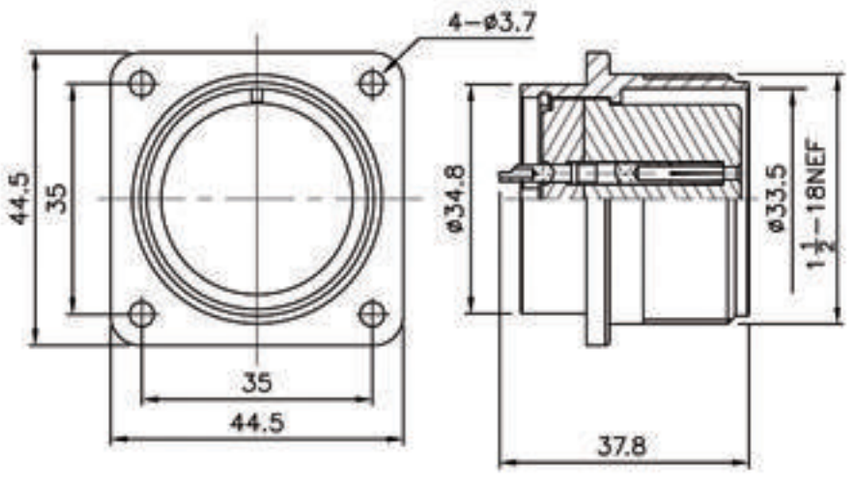

PLS-35❖-RF-R

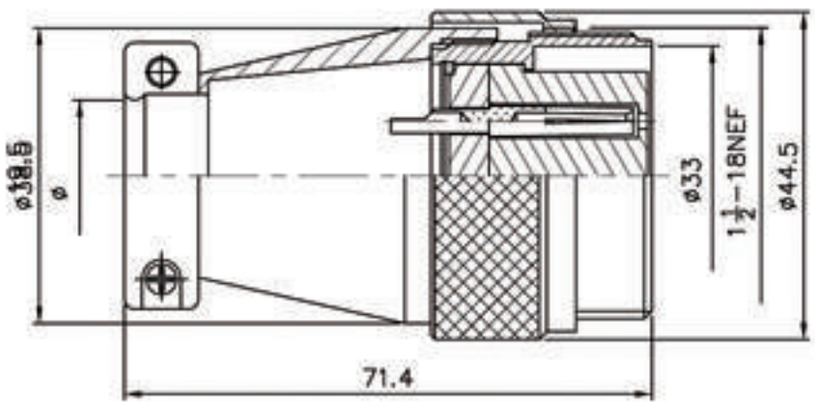

PLS-35❖-ADF-R

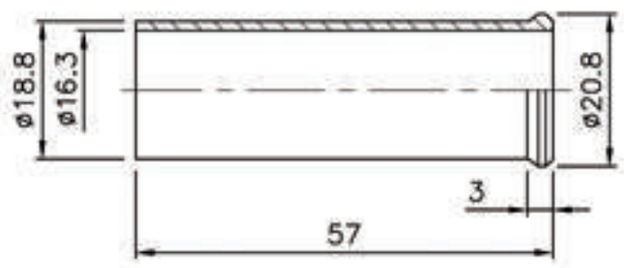

RUBBER TUBE :
ACCESSORY FOR PLS-35❖-PM

RF

PM

ADF

GPM

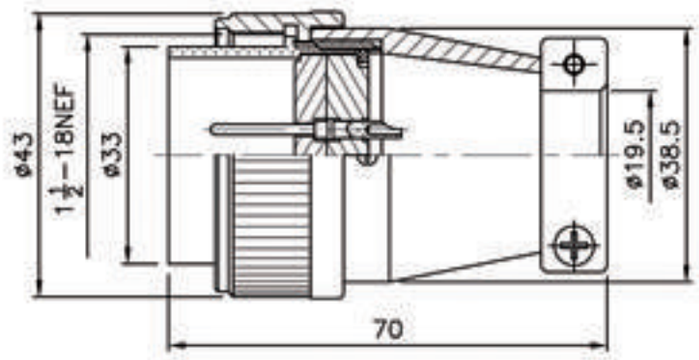

PLS-35❖-PM-R

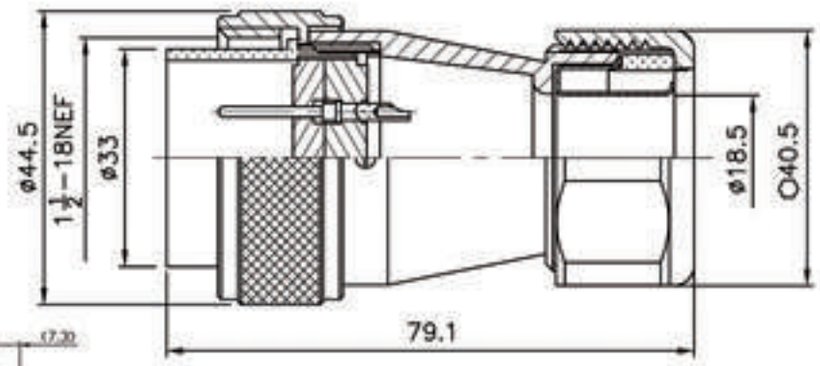

PLS-35❖-GPM6-R

6=轉接3/4”軟管
Connected with 3/4”conduit

Material: Aluminum Alloy
材質: 鋁合金

AMS25043-24A

❖ No. of contacts	24					
Contacts Configuration	 TÜV					
Rated current / voltage	8A 250V					
Operating voltage limit (AC.V.rms)	200					
Withstanding voltage (AC.V.rms) 1 minute	1000					
Insulation resistance (MΩ MIN.) at DC 500V	1000					
Contact resistance (mΩ MAX.) at DC 1A	3					
Solder inter diameter	1.8					

● 以上機種可設計防水型 Above models could be altered to waterproof types IP65 IP67 IP68

SHELL SIZE 41

Input Type / Output Type

PLS-41 Series

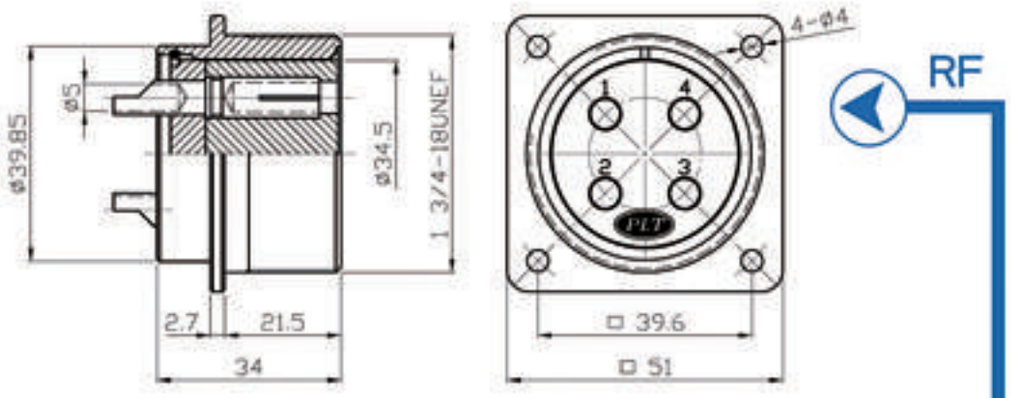

PLS-41❖-RF-R

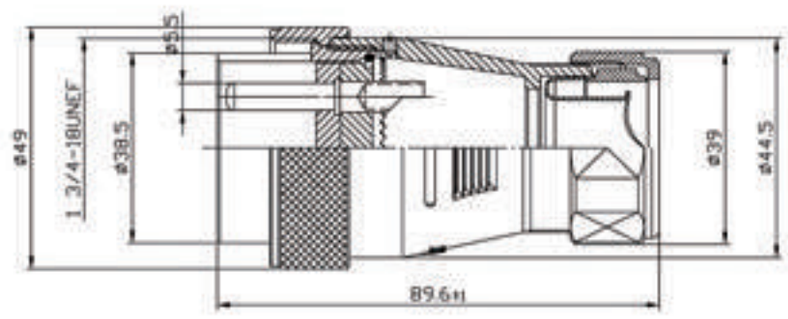

PLS-41❖-GPM6-R

6=轉接3/4"軟管

Connected with 3/4"conduit

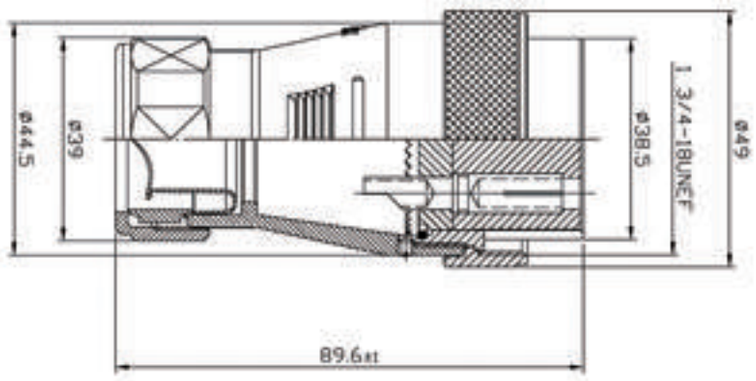

PLS-41❖-GPF6-R

6=轉接3/4"軟管

Connected with 3/4"conduit

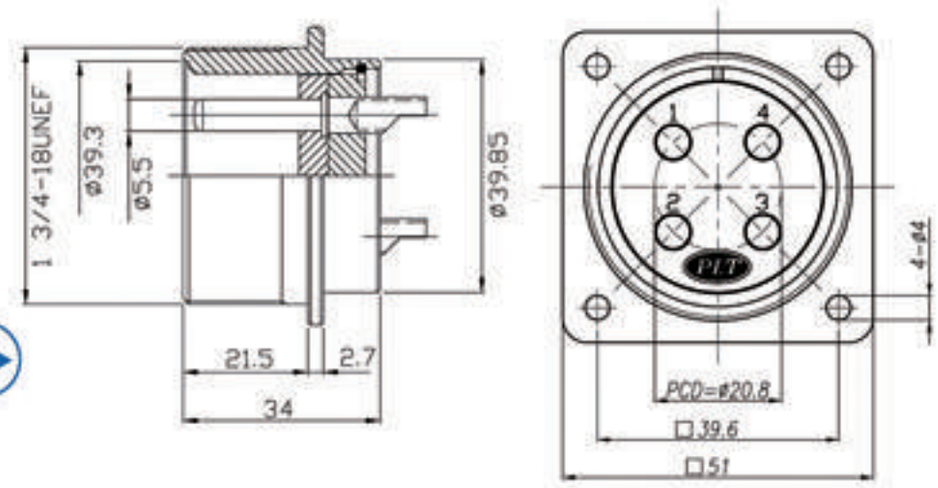

PLS-41❖-RM-R

❖ No. of contacts	4	8				
Contacts Configuration						
Rated current / voltage	30A 250V	15A 250V				
Operating voltage limit (AC.V.rms)	500	400				
Withstanding voltage (AC.V.rms) 1 minute	2500	2000				
Insulation resistance (MΩ MIN.) at DC 500V	2500	2000				
Contact resistance (mΩ MAX.) at DC 1A	3	3				
Solder inter diameter	5	3.5				

PLT SINCE 1978

● 以上機種可設計防水型 Above models could be altered to waterproof types IP65 IP67 IP68

SHELL SIZE

TÜV

Input Type / Output Type

PLS-42 Series

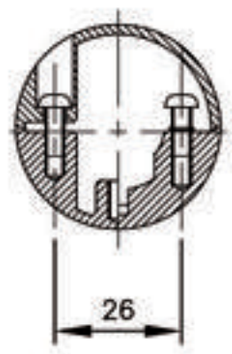

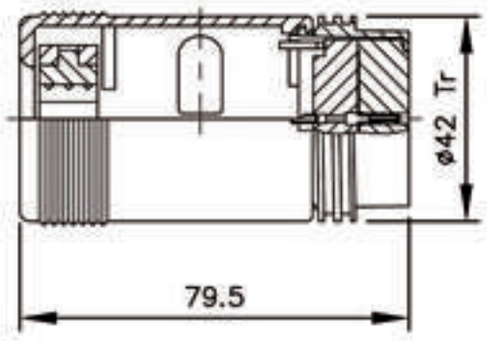

PF

PLS-42❖-PF

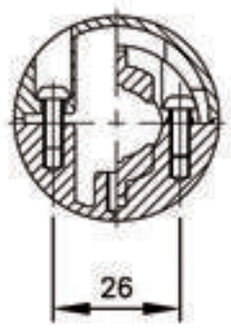

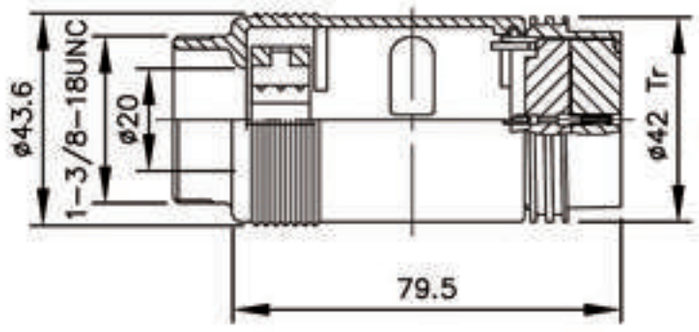

PF1

PLS-42❖-PF1

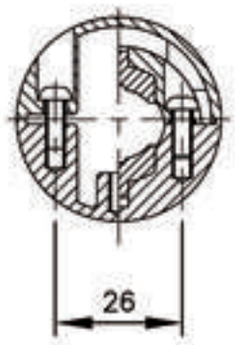

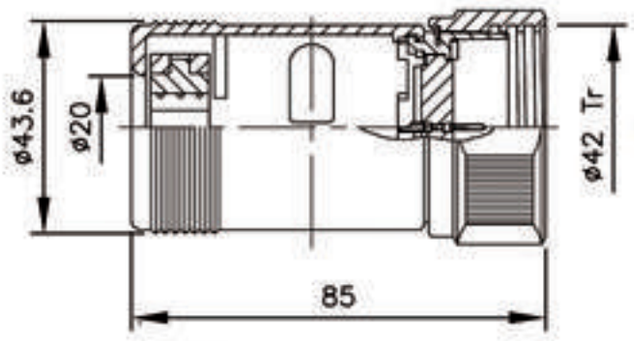

PM

PLS-42❖-PM

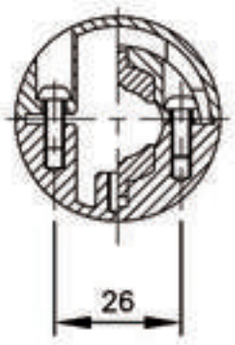

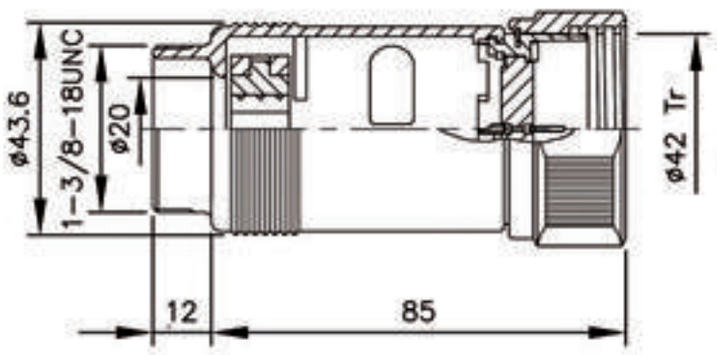

PM1

PLS-42❖-PM1

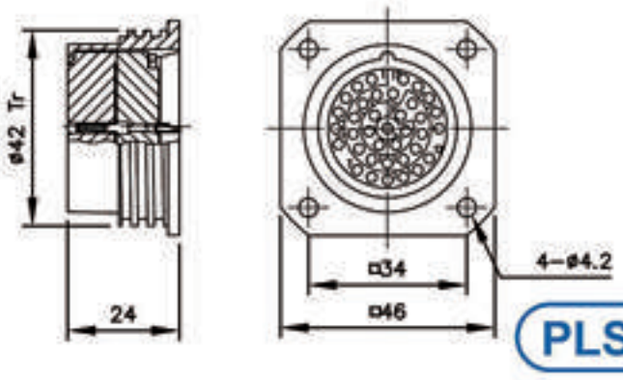

RF

PLS-42❖-RF

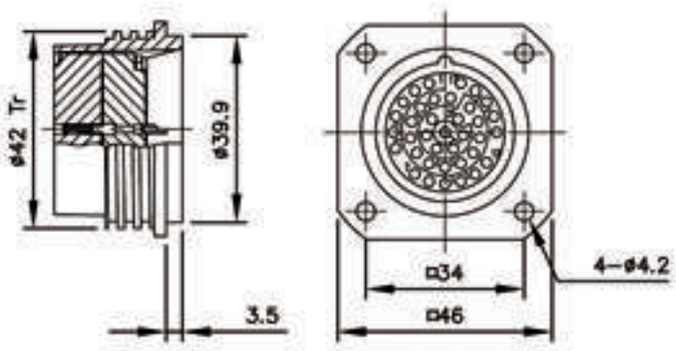

RF1

PLS-42❖-RF1

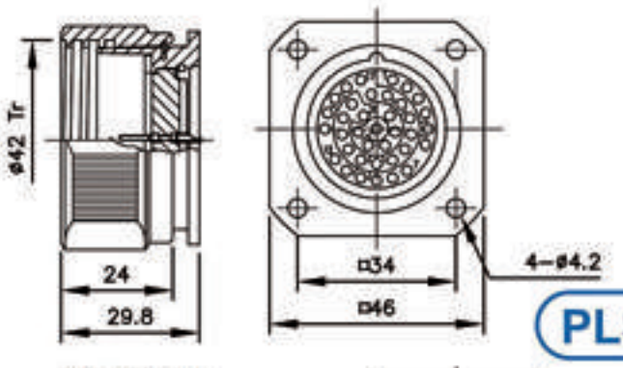

RM

PLS-42❖-RM

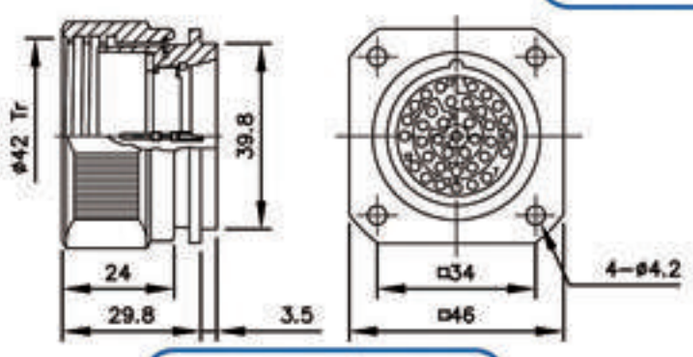

RM1

PLS-42❖-RM1

Accessory:
Cable Clamp

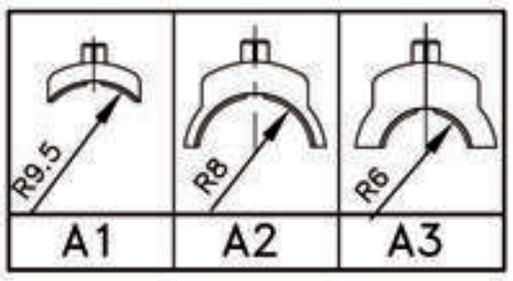

❖ No. of contacts	7	37				
Contacts Configuration						
Rated current / voltage	13A 250V	5A 250V				
Operating voltage limit (AC.V.rms)	500	500				
Withstanding voltage (AC.V.rms) 1 minute	2000	3000				
Insulation resistance (MΩ MIN.) at DC 500V	2000	2000				
Contact resistance (mΩ MAX.) at DC 1A	3	3				
Solder inter diameter	3.5	1.2				

● 以上機種可設計防水型 Above models could be altered to waterproof types IP65 IP67 IP68


PAT
PLP Series


PAT
PLP Series


PAT
PLP Series


PAT
PLP Series


PLP-141P20 Series


PLP-154P6 Series


M-6029 Series


PAT
PLTS-40 Series

TÜV

Input Type/Output Type

PLP-124B-24B-PM
PLP-124B-24B-PF
PLP-124C-24B-PM
PLP-124C-24B-PF

PLP-116A-PM

PLP-124A-PM

PLP-116A-RF

PLP-124A-RF

PLP Series

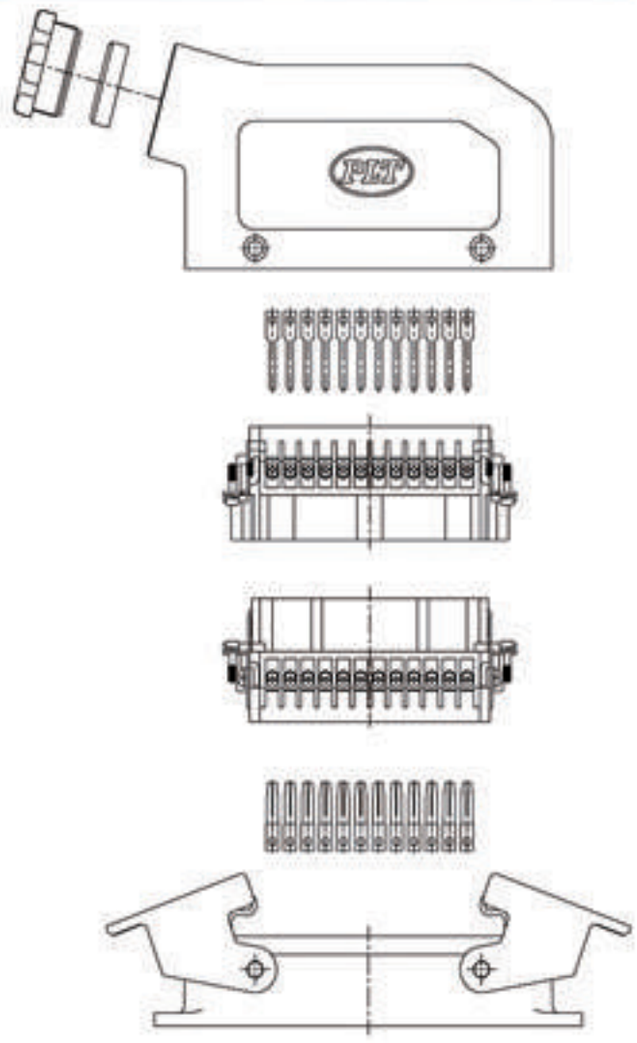

PLP-124B-24B+
PLP-124B-24C

PLP-124B-24B-PF+
PLP-124HI-24C-RM

PLP-124B-24B-PF+
PLP-124A-RM

PLP-124A-24F+
PLP-124A-24M

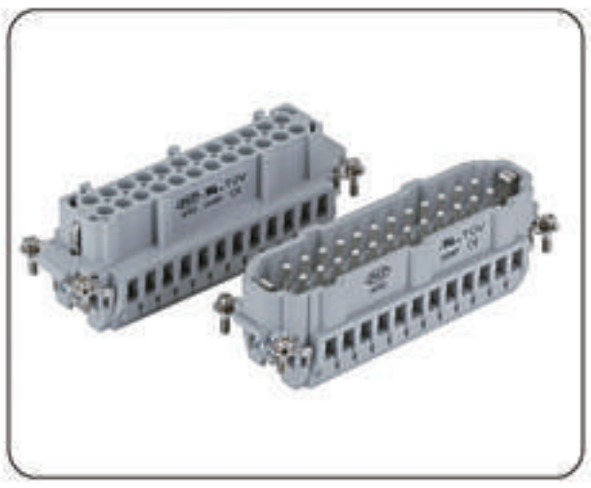

ORDERING INFORMATION

PLP-116A - 16B

- 16B : 16 POLE HOOD
- 16C : 16 POLE HOUSING
- 24B : 24 POLE HOOD
- 24C : 24 POLE HOUSING
- 16M : 16 POLE MALE INSERT
- 16F : 16F POLE FEMALE INSERT
- 24M : 24 POLE MALE INSERT
- 24F : 24 POLE FEMALE INSERT
- NUMBER OF CONTACTS
- SERIES

Rated Current	: 16A max
Rated Voltage	: 380 ~ 450V
Withstandinf Voltage (AC. V. r.m.s) 1 Minute	: 3000V
Contact Resistance (mΩ Max) at DC 1A	: 1 mΩ
Insulation Resistance	: 5000 mΩ
Water Protection	: IP65
Temperature Range	: -40℃ ~ 125℃

MALE INSERT
PLP-116A-16M

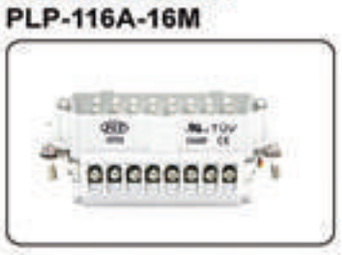

MALE

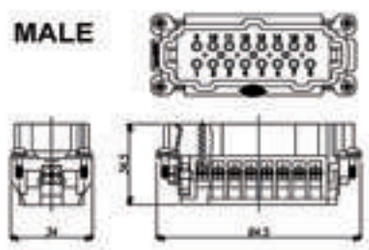

FEMALE INSERT
PLP-116A-16F

FEMALE

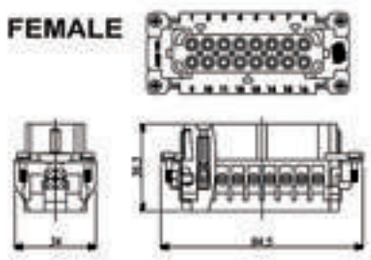

HOODS
PLP-116A-16B

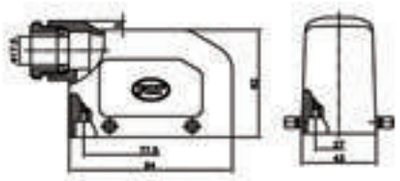

HOUSING
PLP-116A-16C

PAT

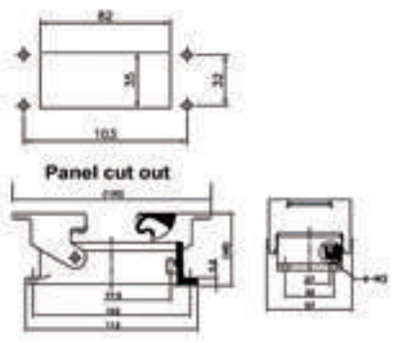

● 以上機種可設計防水型 Above models could be altered to waterproof types IP65 IP67 IP68

PLP Series

PLP-141P20 Series

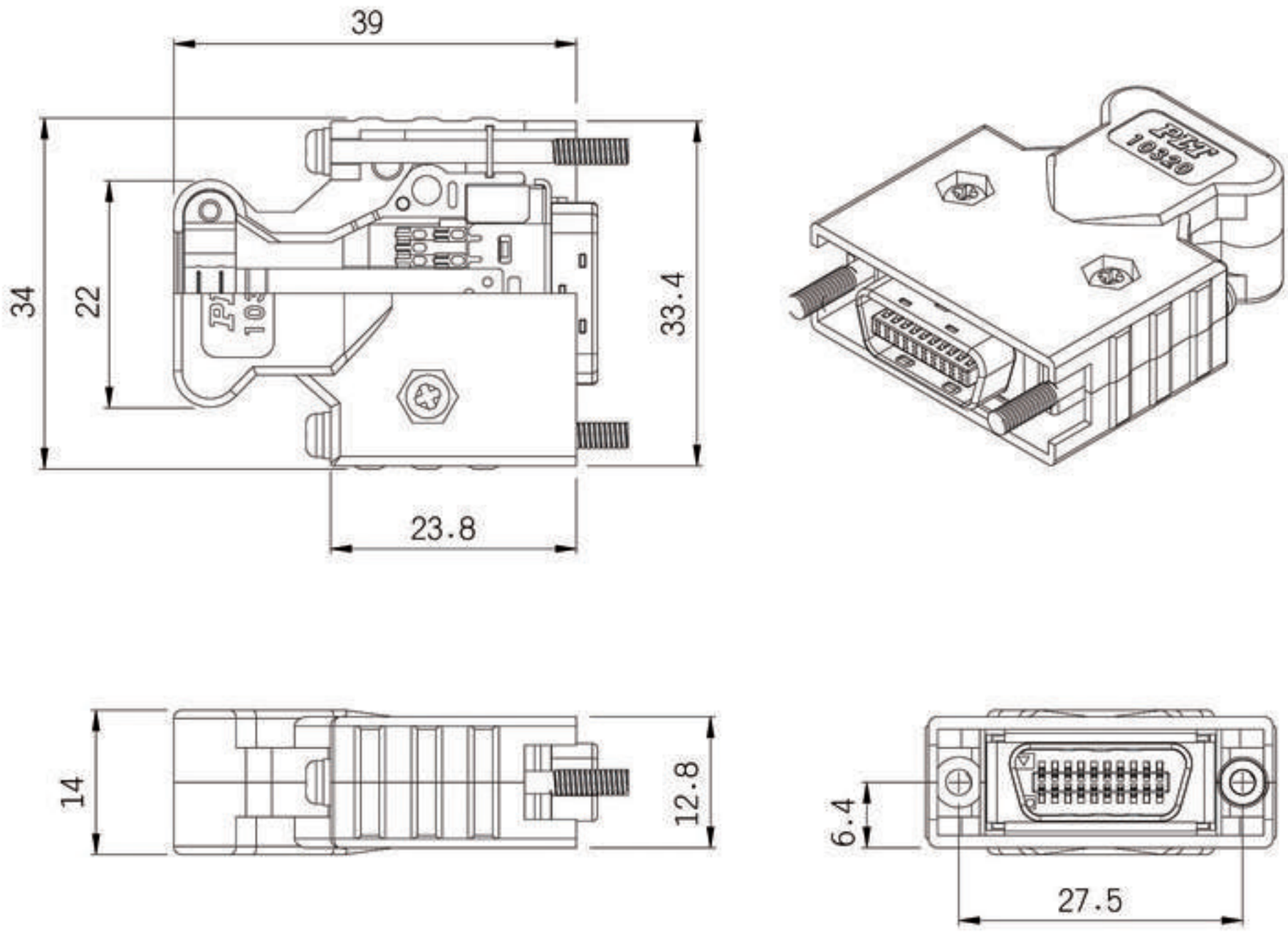

No. of contacts	20					
Contacts Configuration						
Rated current	1A					
Withstanding voltage (AC.V.rms) 1 minute	500					
Insulation resistance (MΩ MIN.) at DC 500V	>1 X 10^8 Ω					

PLT SINCE 1978

● 以上機種可設計防水型 Above models could be altered to waterproof types IP65 IP67 IP68

PLP Series

PLP-154P6 Series

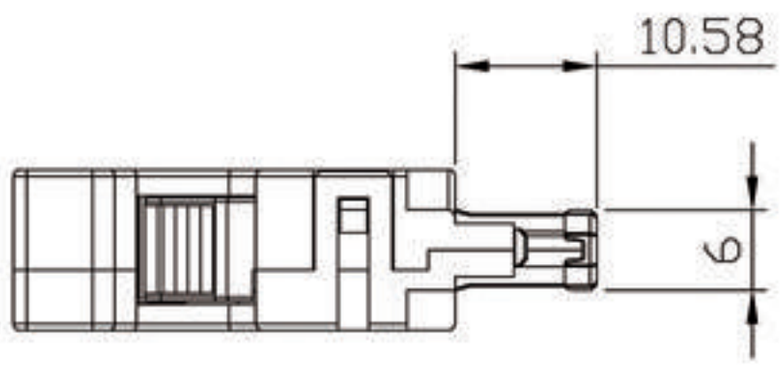

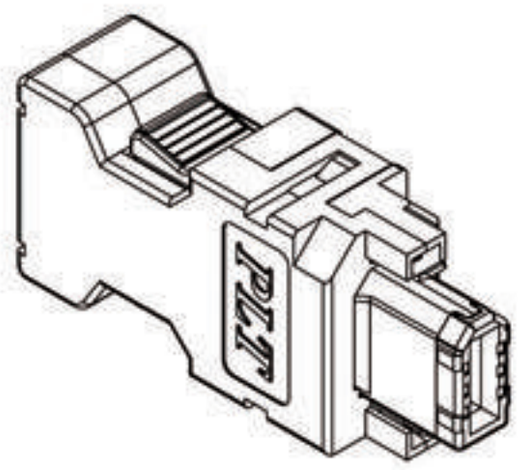

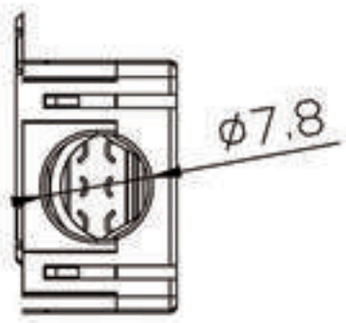

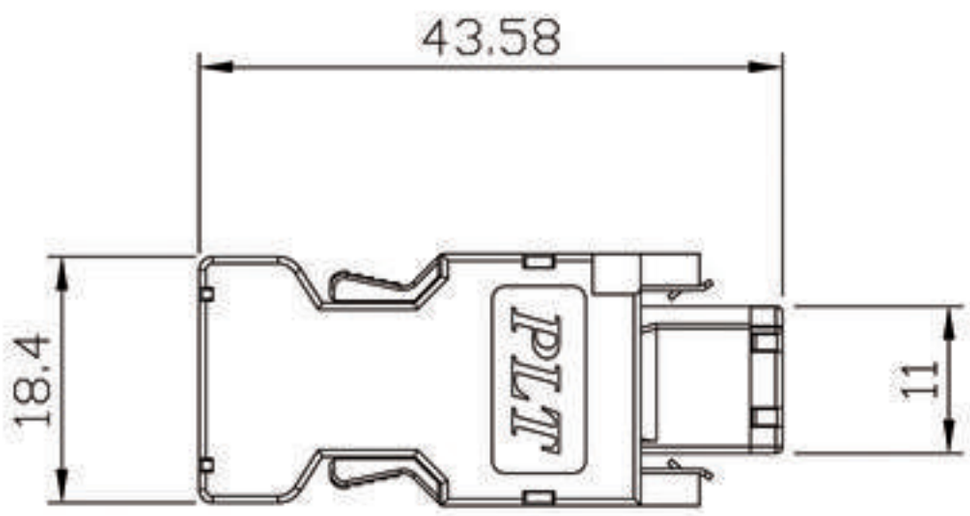

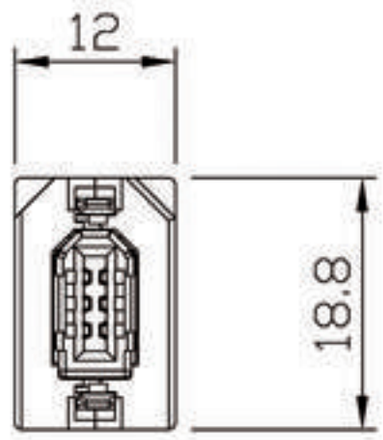

❖ No. of contacts	6					
Contacts Configuration						
Rated current / voltage						
Operating voltage limit (AC.V.rms)						
Withstanding voltage (AC.V.rms) 1 minute	350					
Insulation resistance (MΩ MIN.) at DC 500V	1000					
Contact resistance (mΩ MAX.) at DC 1A	20					

● 以上機種可設計防水型 Above models could be altered to waterproof types IP65 IP67 IP68

M series

M-6029 Series

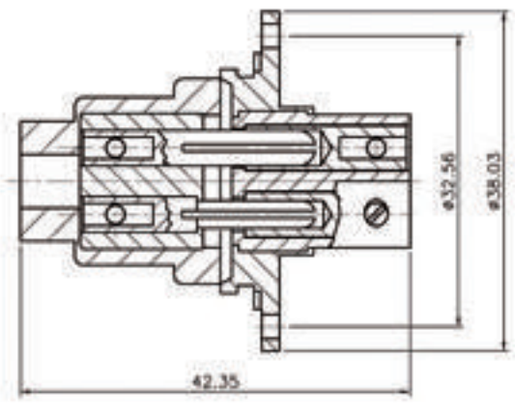

M-6029

PM

RF

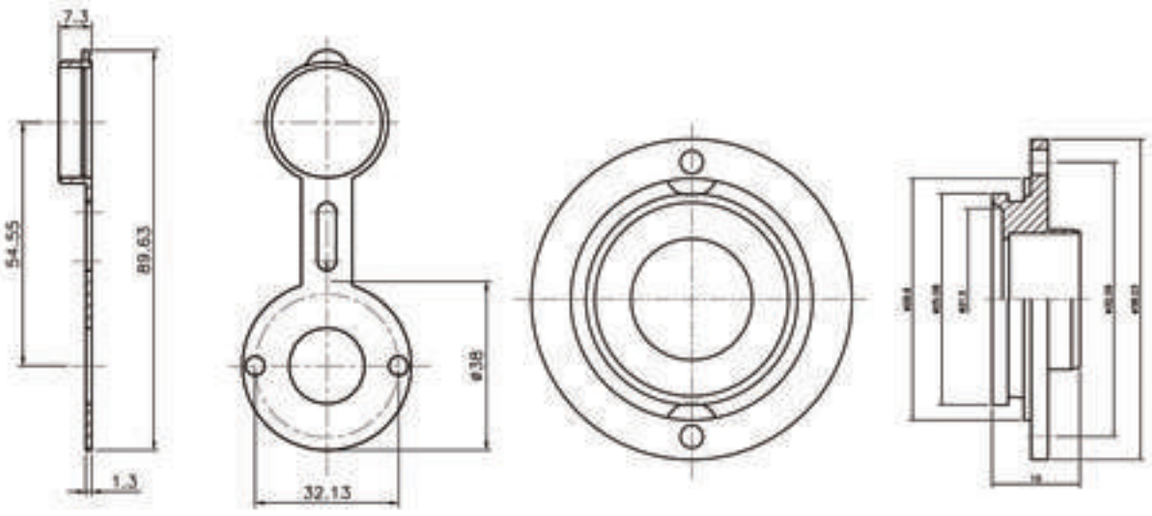

M-6029

PLT SINCE 1978
● 以上機種可設計防水型 Above models could be altered to waterproof types IP65 IP67 IP68
專利產品，仿冒必究
Patent of invention, all rights reserved

TÜV

Multi-Jointed Connectors for Machine Plate

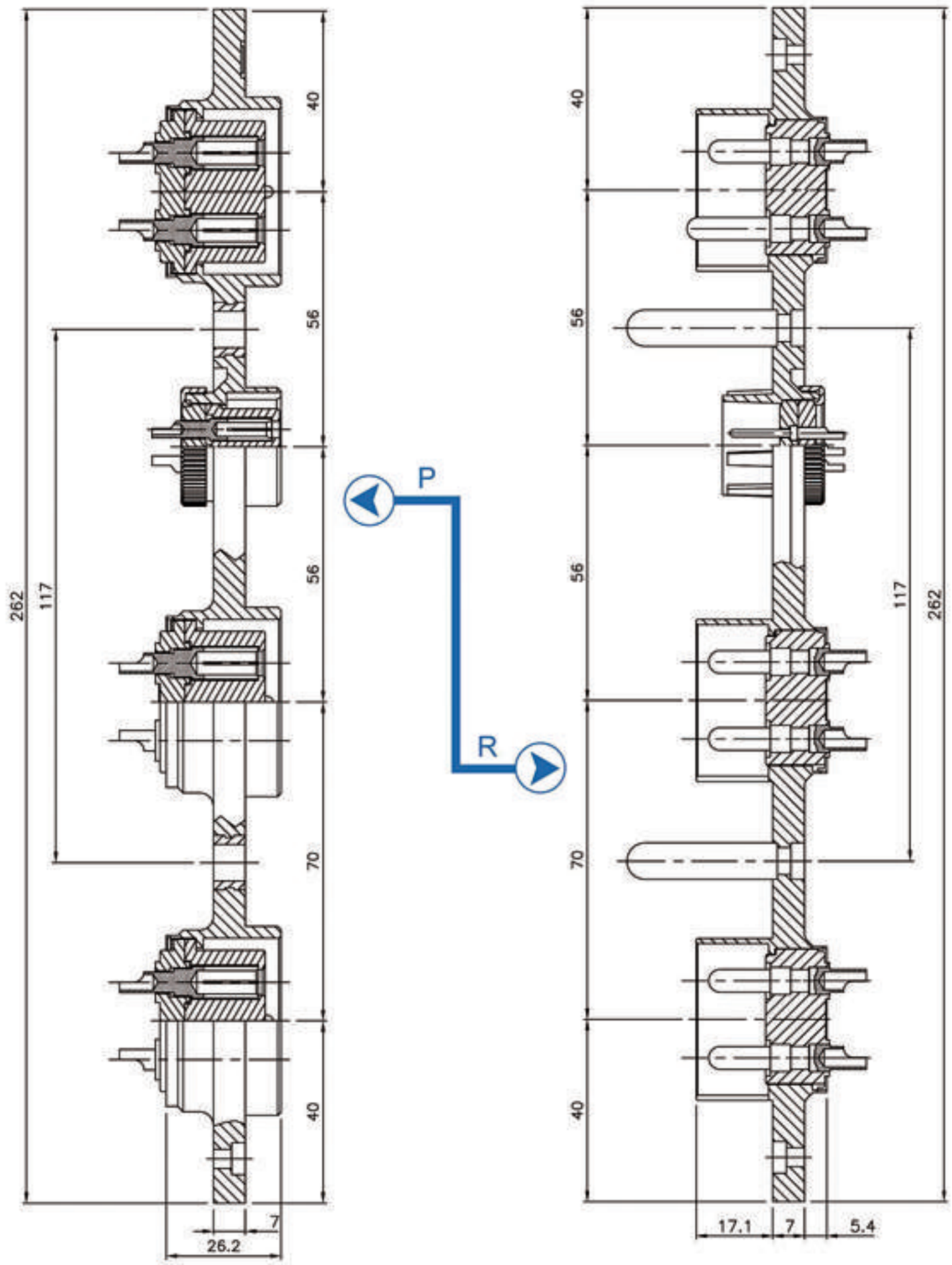

PLTS-40 Series

PAT PLTS-40❖-P

PAT PLTS-40❖-R

❖ No. of contacts	4					
Contacts Configuration						
Rated current / voltage	30A 250V					
Operating voltage limit (AC.V.rms)	500					
Withstanding voltage (AC.V.rms) 1 minute	2500					
Insulation resistance (MΩ MIN.) at DC 500V	2000					
Contact resistance (mΩ MAX.) at DC 1A	3					
Solder inter diameter	4					

● 以上機種可設計防水型 Above models could be altered to waterproof types IP65 IP67 IP68

專利產品，仿冒必究
Patent of invention, all rights reserved

PLT SINCE 1978

Multi-Jointed Connectors for Machine Plate

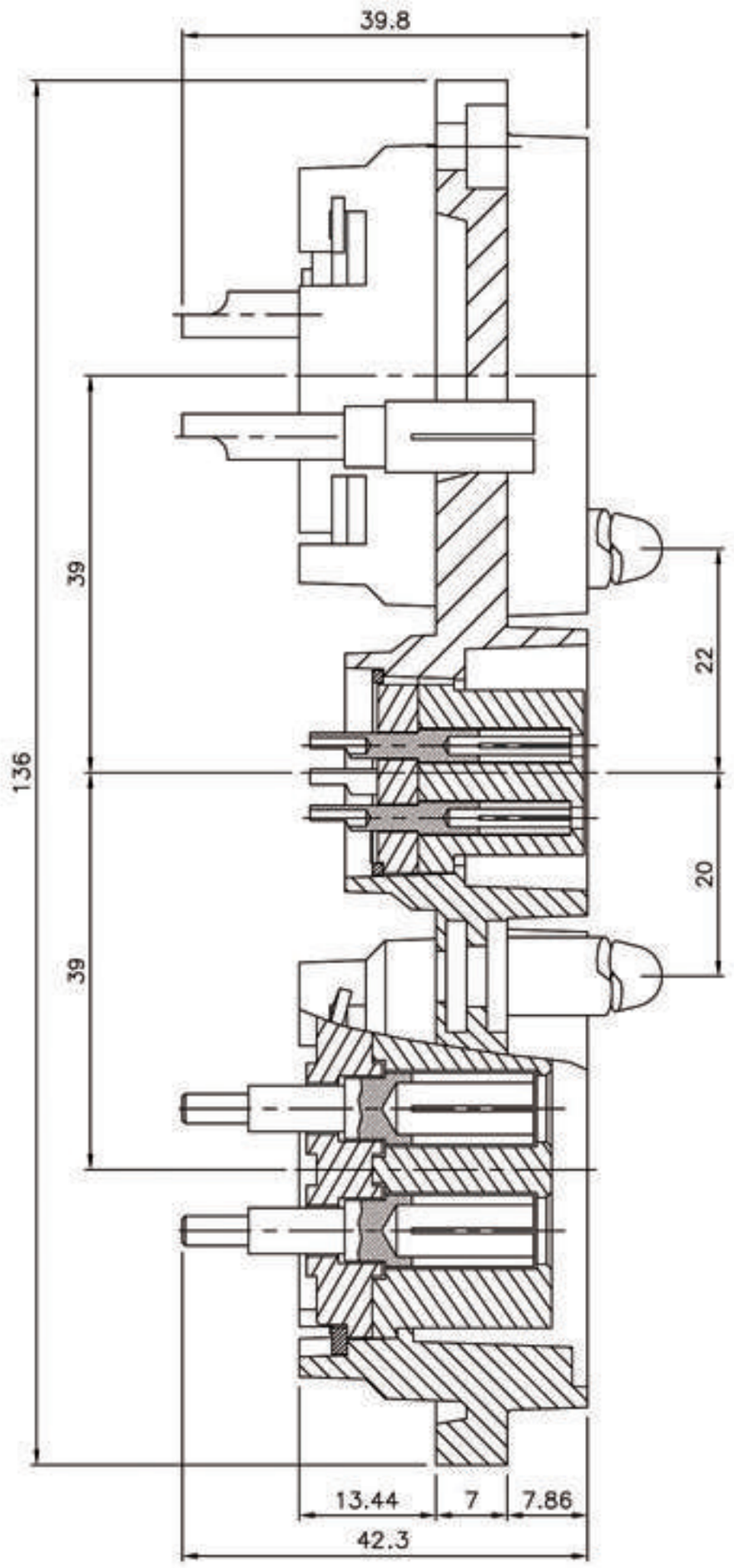

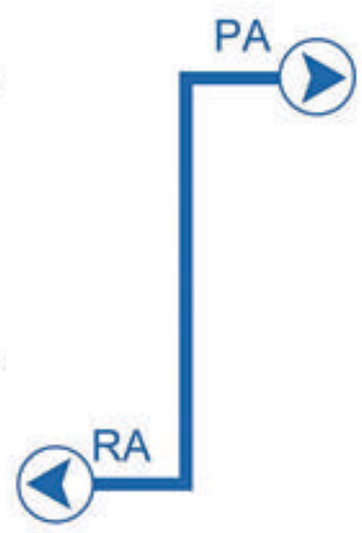

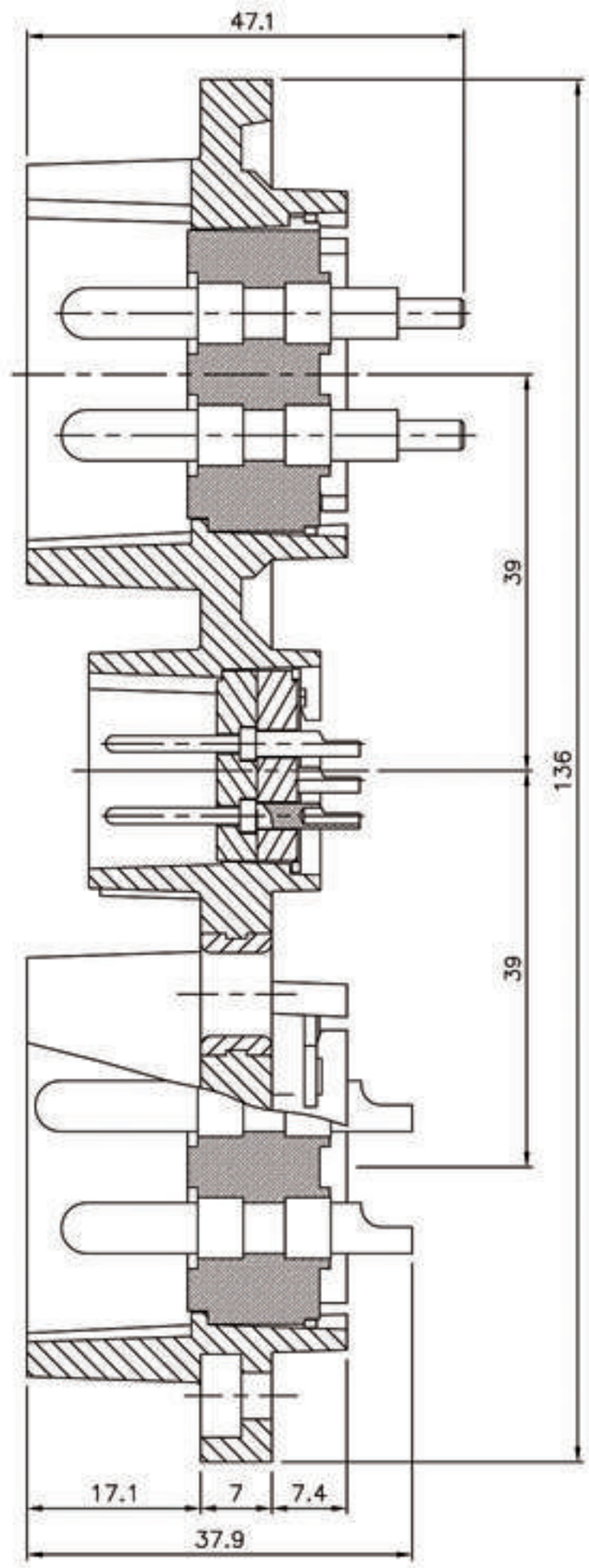

PAT PLTS-40❖S-RA

PAT PLTS-40❖S-PA

❖ No. of contacts	4					
Contacts Configuration						
Rated current / voltage	30A 250V					
Operating voltage limit (AC.V.rms)	500					
Withstanding voltage (AC.V.rms) 1 minute	2500					
Insulation resistance (MΩ MIN.) at DC 500V	2000					
Contact resistance (mΩ MAX.) at DC 1A	3					
Solder inter diameter	4					

PLT SINCE 1978
● 以上機種可設計防水型 Above models could be altered to waterproof types IP65 IP67 IP68
專利產品，仿冒必究
Patent of invention, all rights reserved

www.plt.com.tw

E-mail: apexmail@plt.com.tw

made in Taiwan 100% 台灣製造

— BUSINESS SCOPE —

The 1st Production Dept. 第一製造部

Connector ・ 軍用、防水、防爆、電機、醫療、工業連接器系列

Military / Waterproof / RF Coaxial / Industrial Series

The 2nd Production Dept. 第二製造部

Various Types of Molds ・ 精密模具

Customized Mold and Machinery Components Design & Manufacturing

The 3rd Production Dept. 第三製造部

Wire Assembly ・ 自動控制器材，配線接續部品

The 4th Production Dept. 第四製造部

Wireless Communication ・ 無線通信、天線、電子設備

Antenna / Transceiver / Peripheral Earphone Mic

The 5th Production Dept. 第五製造部

Precision Machine Manufacturing ・ 精密微調壓床、電動沖床、CNC自動電腦車銑複合機

CNC Turning and Milling Compound Lathe / Precision Arbor Press and Mechanical Press Manufacturing

The 6th Production Dept. 第六製造部

Medical Facilities for Senior Health Care ・ 醫療設備、健康照護

Wireless Remote Control Patient Care System / Medical Care On-Call System

The 7th Production Dept. 第七製造部

Channels of Distribution for Products Solution ・ 倉儲配銷、物流通路代理

Dirersified products for more information, please check our websit

產品多元・網站查詢

Agent / 代理商

鍇PLT鋼

APEX CONNECTOR

Since 1978

Manufacturer / 國防部優質廠商 OEM / ODM Welcome

鍇鋼精密科技股份有限公司

APEX PRECISION TECHNOLOGY CORP.

總公司/總廠：24264 台灣新北市新莊區民安西路405號·Tel+886-2-2206-8899 (代表號)·Fax+886-2-2208-0559

Add No. 405, Min-an W. Rd., Sinjhuang District, New Taipei City 24264,Taiwan. R.O.C.

台中/大雅廠：42844 台灣台中市大雅區民生路3段191巷6號·Tel+886-4-2620-3939 ·Fax+886-4-2620-3851

Add No.6, Ln. 191, Sec. 3, Minsheng Rd., Daya Dist., Taichung City 42844, Taiwan. R.O.C.

日本分公司

株式会社 PLT JAPAN

技術研發・台灣製造 / 進出口貿易

〒151-0053 東京都渋谷区代々木3丁目28番-1

28-1, Yoyogi 3-Chome, Shibuya-ku, Tokyo, Japan

TEL：+81-3-6276-8845(代) FAX：+81-3-6276-6645

GreatKingdom

IPO 專業採購服務・整廠設備輸出

http://rf.plt.com.tw

ISO/TS16949 ISO14001 ISO9001 International Q/C Certification RoHS Compliant

ISO/TS 16949 全球汽車產業品質管理系統認證合格廠

ISO 9001~14001 國際環境品質管理系統保認證合格廠

ISO / TS 16949 CERTIFIED IN GLOBAL AUTOMOBILE INDUSTRY

ISO 14001 / 9001 INTERNATIONAL Q/C CERTIFIED

專利產品・仿冒必究 Patend of invention, all right reserved Copyright © 2017 by APEX, all rights reserved 版權所有 翻印必究

Version: S-187EO-132-3 Printed in 2017/08